TECHNICAL MANUAL

ORGANIZATIONAL MAINTENANCE REPAIR PARTS AND SPECIAL TOOLS LIST

LOADER, SCOOP TYPE: PNEU-TIRED, DIESEL ENGINE DRIVEN; HINGED FRAME STEER, WITH 2 1/2 CUBIC YARD MULTI-PURPOSE BUC (ALLIS-CHALMERS MODEL 645M)

FSN 3805-051-9359

RETURN TO GOV DOCS COLL

This copy is a reprint which includes current pages from Changes 1 and 2.

HEADQUARTERS, DEPARTMENT OF THE ARM

CHANGE
NO. 2

HEADQUARTERS
DEPARTMENT OF THE AR
WASHINGTON, DC, *15 June 1984*

ORGANIZATIONAL MAINTENANCE REPAIR PARTS AND SPECIAL TOOLS LIST FOR LOADER, SCOOP TYPE: PNEU-TIRED, DIESEL ENGINE-DRIVEN; HINGED FRAME STEER WITH 2 1/2 CUBIC YARD MULTIPURPOSE BUCKET (ALLIS-CHALMERS MODEL 645M) (NSN 3805-00-051-9359)

TM 5-3805-239-20P, 30 August 1974, is changed as follows:

1. Remove old pages and insert new pages as indicated below.
2. New or changed material is indicated by a vertical bar in the margin of the page.
3. Added or revised illustrations are indicated by a vertical bar adjacent to the illustration indentification number.

Remove Pages	*Insert Pages*
1 and 2	1 and 2
9 and 10	9 through 10.1/10.2 blank)
13 and 14	13 and 14
17 and 18	17 and 18
21 and 22	21 and 22
27 and 28	27 and 28
33 and 34	33 and 34
	60.1 and 60.2
121 through 126	121 through 126
129 through 136	129 through 136
Authentication Page	

4. File this change in front of the publication for reference purposes.

By Order of the Secretary of the Army:

JOHN A. WICKHAM, J
General, United States A
Chief of Staff

Official:

ROBERT M. JOYCE
Major General, United States Army
The Adjutant General

Distribution:
To be distributed in accordance with DA Form 12-25B, Direct and General Support Maintenance requirements for Loaders.

CHANGE
NO. 1

HEADQUARTERS
DEPARTMENT OF THE ARMY
WASHINGTON, DC, *15, January 1982*

Organizational Maintenance Repair Parts and Special Tools List For LOADER, SCOOP TYPE: PNEU-TIRED, DIESEL ENGINE-DRIVEN; HINGED FRAME STEER, WITH 2 1/2 CUBIC YARD MULTIPURPOSE BUCKET (ALLIS-CHALMERS MODEL 645M) (NSN 3805-00-051-9359)

Current as of 1 September 1981

TM 5-3805-239-20P, 30 August 1974, is changed as follows:

1. Remove old pages and insert new pages as indicated below. New or changed material is indicated by a vertical bar in the margin of the page. When an entire section is added or revised, the vertical bar will be adjacent to the title only.

Remove pages	*Insert pages*
v through vii	v through vii
1 and 2	1 and 2
7 and 8	7 and 8
13 through 24	13 through 24
27 and 28	27 and 28
31 and 32	31 and 32
35 and 36	35 and 36
121 through 134	121 through 136

2. File this change sheet in front of the publication for reference purposes.

By Order of the Secretary of the Army:

E. C. MEYE
General, United Sta
Chief of Sta

Official:

ROBERT M. JOYCE
Brigadier General, United States Army
The Adjutant General

Distribution:

To be distributed in accordance with DA Form 12-25B, organizational maintenance require loaders.

Section I.
INTRODUCTION

1. Scope

This manual lists repair parts, special tools, test, measurement, and diagnostic equipment (TMDE), and other support equipment required for operation and performance of organizational support maintenance of the loader, scoop.

2. General

a. Section II — Repair Parts List. A list of repair parts authorized for use in the performance of maintenance. The list also includes parts which must be removed for replacement of the authorized parts. Parts lists are composed of functional groups in ascending numerical sequence, with the parts in each group listed in figure and item number sequence. Bulk materials are listed in FSN sequence, as the last group in Section II.

b. Section III — Special Tools List. (Not applicable).

c. Section IV — Federal Stock Number and Part Number Index. A list, in ascending numerical sequence, of all Federal stock numbers appearing in the listings, followed by a list, in alphanumeric sequence, of all part numbers appearing in the listings. Federal stock number and part numbers are cross-referenced to each illustration figure and item number appearance.

3. Explanation of Columns

The following provides an explanation of columns found in the tabular listings:

a. Illustration. This column is divided as follows:

(1) *Figure number.* Indicates the figure number of the illustration in which the item is shown.

(2) *Item number.* The number used to identify each item called out in the illustration.

b. Source, Maintenance, and Recoverability Codes (SMR).

(1) *Source Code.* Source codes are assigned to support items to indicate the manner of acquiring support items for maintenance, repair, or overhaul of end items. Source codes are entered in the first and second positions of the Uniform SMR Code format as follows:

Code	*Definition*
PA	Item procured and stocked for anticipated or known usage.
PB	Item procured and stocked for insurance purpose because essentiality dictates that a minimum quantity be available in the supply systems.
PC	Item procured and stocked and which otherwise would be coded PA except that it is deteriorative in nature.
PD	Support item, excluding support equipment, procured for initial issue or outfitting and stocked only for subsequent or additional initial issues or outfittings. Not subject to automatic replenishment.
PE	Support equipment procured and stocked for initial issue or outfitting to specified maintenance repair activities.
PF	Support equipment which will not be stocked but which will be centrally procured on demand.
PG	Item procured and stocked to provide for sustained support for the life of the equipment. It is applied to an item peculiar to the equipment which, because of probable discontinuance or shutdown of production facilities, would prove uneconomical to reproduce at a later time.
KD	An item of a depot overhaul/repair kit and not purchased separately. Depot kit defined as a kit that provides items required at the time of overhaul or repair.
KF	An item of a maintenance kit and not purchased separately. Maintenance kit defined as a kit that provides an item that can be replaced at organizational or intermediate levels of maintenance.
KB	Item included in both a depot overhaul/repair kit and a maintenance kit.
MO	Item to be manufactured or fabricated at organizational level.
MF	Item to be manufactured or fabricated at the direct support maintenance level.
MH	Item to be manufactured or fabricated at the general support maintenance level.
MD	Item to be manufactured or fabricated at the depot maintenance level.
AO	Item to be assembled at organizational level.
AF	Item to be assembled at direct support maintenance level.
AH	Item to be assembled at general support maintenance level.
AD	Item to be assembled at depot maintenance level.
XA	Item is not procured or stocked because the requirements for the item will result in the replacement of the next higher assembly.
XB	Item is not procured or stocked. If not available through salvage, requisition.
XD	A support item that is not stocked. When required, item will be procured through normal supply channels.

NOTE

Cannibalization or salvage may be used as a source of supply for any items source coded above except those coded XA or XD.

(2) *Maintenance code.* Maintenance codes are assigned to indicate the levels of maintenance authorized to use and repair support items. The maintenance codes are entered in the third and fourth positions of the Uniform SMR Code format as follows:

(*a*) The maintenance code entered in the third position will indicate the lowest maintenance level authorized to remove, replace, and use the support item. The maintenance code entered in the third

C Crew or operator maintenance performed within organizational maintenance.

O Support item is removed, replaced, used at the organizational level.

I Support item is removed, replaced, used by the direct support element of integrated direct support maintenance.

F Support item is removed, replaced, used at the direct support level.

H Support item is removed, replaced, used at the general support level.

D Support items that are removed, replaced, used at depot, mobile depot, specialized repair activity only.

NOTE

Codes "I" and "F" will be considered the same by direct support units.

(b) The maintenance code entered in the fourth position indicates whether the item is to be repaired and identified the lowest maintenance level with the capability to perform complete repair (i.e., all authorized maintenance functions). This position will contain one of the following maintenance codes:

Code — *Application/Explanation*

O The lowest maintenance level capable of complete repair of the support item is the organizational level.

F The lowest maintenance level capable of complete repair of the support item is the direct support level.

H The lowest maintenance level capable of complete repair of the support item is the general support level.

D The lowest maintenance level capable of complete repair of the support item is the depot level.

L Repair restricted to designated specialized repair activity.

Z Nonreparable. No repair is authorized.

B No repair is authorized. The item may be reconditioned by adjusting, lubricating, etc., at the user level. No parts or special tools are procured for the maintenance of this item.

(3) *Recoverability code.* Recoverability codes are assigned to support items to indicate the disposition action on unserviceable items. The recoverability code is entered in the fifth position of the Uniform SMR Code format as follows:

Recoverability Codes — *Definition*

Z Nonreparable item. When unserviceable, condemn and dispose at the level indicated in position 3.

organizational level.

F Reparable item. When uneconom reparable, condemn and dispose at the support level.

H Reparable item. When uneconom reparable, condemn and dispose at the g support level.

D Reparable item. When beyond lower level capability, return to depot. Condem and disposal not authorized below depot

L Reparable item. Repair, condemnation disposal not authorized b depot/specialized repair activity level.

A Item requires special handling or condem procedures because of specific reason precious metal content, high dollar critical material or hazardous material). to appropriate manuals/directives for s instructions.

g. Unit of Measure (U/M). Indicates the sta of the basic quantity of the listed item as u performing the actual maintenance function. measure is expressed by a two-cha alphabetical abbreviation (e.g., ea, in, pr, etc.). the unit of measure differs from the unit of issu lowest unit of issue that will satisfy the re units of measure will be requisitioned.

h. Quantity Incorporated in Unit. Indicate quantity of the item used in the breakout sho the illustration figure, which is prepared for a tional group, subfunctional group, or an asse A "V" appearing in this column in lieu of a qua indicates that no specific quantity is appli (e.g., shims, spacers, etc.).

4. Special Information

a. Detailed manufacturing instructions for source coded to be manufactured or fabricate found in TM 5-3805-239-12. Bulk mat required to manufacture items are listed in the Material Group of this manual.

b. Detailed assembly instructions for source coded to be assembled are found i 5-3805-239-35. Assembly components are immediately following the item to be assembled

c. Repair parts kits and gasket sets appear last entries in the repair parts listing for the f in which its parts are listed as repair parts listed at the end of the repair parts listing fo last figure containing parts of the kit.

d. The following publications pertain to the Loader, Scoop and its components:

TM 5-3805-239-12 Operator and Organizational Maintenance Manual

The illustrations in this manual are identical to those published in TM 5-3805-239-34P. Only those parts assigned the third position SMR maintenance code "C" or "O" are listed in the tabular listing; therefore, there may be a break in the item number sequence. Only illustrations containing organizational authorized items appear in this manual.

e. (Applicable to revision and/or change only). Action change codes indicated in the left-hand margin of the listing page denote the following:

N—Indicates an added item.
C—Indicates a change in data.
R—Indicates a change in NSN only.

5. How to Locate Repair Parts

a. When Federal Stock Number or Part Number is Unknown:

(1) Using the table of contents, determine the functional group within which the repair part belongs. This is necessary since illustrations are prepared for functional groups, and listings are divided into the same groups.

(2) Find the illustration covering the functional group to which the repair part belongs.

(3) Identify the repair part on the illustration and note the illustration figure and item number of the repair part.

(4) Using the Repair Parts Listing, find the figure and item number noted on the illustration.

b. When Federal Stock Number or Part Number is Known.

(1) Using the Index of Federal Stock Numbers and Part Numbers, find the pertinent Federal stock number or part number. This index is in ascending FSN sequence followed by a list of part numbers in ascending alphanumeric sequence, cross-referenced to the illustration figure number and item number.

c. Federal Stock Number. Indicates the Federal stock number assigned to the item and will be used for requisitioning purposes.

d. Part Number. Indicates the primary number used by the manufacturer which controls the design and characteristics of the item by means of its engineering drawings, specifications standards, and inspection requirements to identify an item or range of items.

NOTE

When a stock numbered item is requisitioned, the repair part received may have a different part number than the part being replaced.

e. Federal Supply Code for Manufacturer (FSCM). The FSCM is a 5-digit numeric code listed in SB 708-42 which is used to identify the manufacturer, distributor, or Government agency, etc.

f. Description. Indicates the Federal item name and, if required, a minimum description to identify the item. Items that are included in kits and sets are listed below the name of the kit or set with the quantity of each item in the kit or set indicated in the quantity incorporated in unit column. When the part to be used differs between serial numbers of the same model, the effective serial numbers are shown as the last line of the description. In the Special Tools List, the initial basis of issue (BOI) appears as the last line in the entry for each special tool, (TMDE, and support equipment. When density of equipments supported exceeds density spread indicated in the basis of issue, the total authorization is increased accordingly.

(2) After finding the figure and item number, locate the figure and item number in the repair parts list.

6. Abbreviations

dia	diameter
hd	head
hex	hexagon
id	inside diameter
lh	left hand
mtg	mounting
od	outside diameter
rh	right hand
thd	thread
thk	thick

7. Reporting Errors and Recommending Improvements

You can help improve this manual. If you find any mistakes or if you know of a way to improve the procedures, please let us know. Mail your letter or DA 2028 (Recommended Changes to Publications and Blank Forms) direct to: Commander, US Army Tank-Automotive Command, ATTN: DRSTA-MBP, Warren, MI 48090. A reply will be furnished to you.

(1) ILLUSTRATION (a) FIG NO.	(b) ITEM NO.	(2) SMR CODE	(3) NATIONAL STOCK NUMBER	(4) PART NUMBER	(5) FSCM	(6) DESCRIPTION USABLE ON CODE	(7) U/M	(8) QTY INC IN UNIT
						SECTION II - REPAIR PARTS FOR ORGANIZATIONAL MAINTENANCE		
						GROUP 01 - BUCKET, BOOM AND LINK UNIT		
1	1	PAOZZ	5315-00-839-5822	MS24665-353	96906	PIN, COTTER: LOCK PIN	EA	2
1	2	PAOZZ	5315-00-928-7125	10786	80194	PIN, STRAIGHT, HEADED: PIN LOCKING	EA	2
1	3	PAOZZ	5315-00-932-0857	18633	80194	PIN, CLAMP, CYLINDER, UPPER	EA	2
1		A000H		58068	80194	BUCKET ASSEMBLY	EA	1
1	4	PA00H	3805-00-470-6684	58066	80194	CLAM ASSEMBY	EA	1
1	5	XAOZZ		51902	80194	HINGE, CIAM	EA	2
1	6	PAOZZ	3120-00-045-9358	23904	80194	BEARING, SLEEVE	EA	4
1	7	PAOZZ	3805-00-066-8793	29561	80194	BLADE, BUCKET	EA	1
1	8	PAOZZ	3805-00-927-4963	60722	80194	BLADE, CLAM	EA	1
1	9	PA00H	3805-00-423-0848	58065	80194	MOLDBOARD ASSEMBLY	EA	1
1	10	PAOZZ	5306-00-717-9637	916448-4	92392	BOLT, PLOW: MOLDBOARD MTG, 3/4-19 THD SIZE, 2 1/4 IN. LG	EA	19
1	11	PAOZZ	3805-00-017-8003	209992	80194	BLADE, MOLDBOARD	EA	1
1	12	PAOZZ	3805-00-017-7928	80476	80194	BIT, END: MOLDBOARD	EA	1
1	13	PAOZZ	5310-00-115-6231	911030-5	92392	NUT, PLAIN HEXAGON: MOLDBOARD MT, 3/4-9 THD SIZE	EA	19
1	14	PAOZZ	5310-00-763-8920	MS51967-20	96906	NUT, PLAIN, HEXAGON: SHANK MTG	EA	18
1	15	PAOZZ	5305-00-207-2279	037332-4	92392	SCREW, CAP, HEXAGON HEAD: SHANK MTG, 5/8-11 THD SIZE, 3 IN. LG	EA	9
1	16	PAOZZ	5305-00-252-5330	037851-3	92392	SCREW, CAP, HEXAGON HEAD: SHANK MTG, 5/8-11 THD SIZE, 3 1/4 IN. LG	EA	9
1	17	PAOZZ		918245-2	92392	PIN, SPRING: TOOTH MTG	EA	9
1	18	PAOZZ	3805-00-909-6587	204157	80194	TIP, TOOTH	EA	9
1	19	PAOZZ	3805-00-999-5905	22929M1	80194	SHANK, TOOTH	EA	9
1	20	PAOZZ		29582	80194	PIN, PIVOT, CLAMP	EA	2
1	21	PAOZZ	4730-00-050-4208			FITTING, LUBRICATION	EA	1
1	22	PAOZZ	5315-00-935-8995	46134	80194	PIN, CLAM CYLINDER, LOWER	EA	2
1	23	PAOZZ	5315-00-930-6042	10815	80194	PIN, STRAIGHT, HEADED: CYLINDER PIN	EA	2
2	1	PAOZZ	5315-00-115-6299	3044869-0	92392	PIN, PIVOT, DUMP CYLINDER	EA	2
2	2	PAOZZ		3001559-8	92392	WASHER, FLAT: PIVOT PIN	EA	2
2	3	PAOZZ		917835-1	92392	NUT, SELF-LOCKING: PIVOT PIN	EA	2
2	4	PAOZZ	5310-00-265-9217	MS35690-825	96906	NUT, PLAIN, HEXAGON: BEARING RETAINER	EA	16
2	5	PAOZZ	5310-00-584-5272	MS35338-10	96906	WASHER, LOCK: BEARING RETAINER	EA	16
2	7	XBOZZ		3052172-8	92392	RETAINER, BEARING	EA	4
2	8	PAOZZ	5305-00-716-8181	MS90726-118	96906	SCREW, CAP, HEXAGON HEAD: BEARING, RETAINER	EA	16
2	9	PAOZZ	4730-00-172-0028	915274-5	92392	FITTING, LUBRICATION: BEARING	EA	2
3	1	XBOZZ		3050142-3	92392	LINK, CROSS	EA	1
3	2	XBOZZ		8050140-7	92392	LINK, CROSS	EA	1
3	3	XBOZZ		3050139-9	92392	LINK, CROSS	EA	1
3	4	XBOZZ		3050141-5	92392	LINK, CROSS	EA	1
3	5	XBOZZ		3042772-8	92392	WASHER, SPACING: .0359 IN. THK	EA	V
3	5	XBOZZ				WASHER, SPACING: .059 IN. THK	EA	V
3	6	PAOZZ	5310-00-400-8504	917835-1	92392	NUT, PLAIN, HEXAGON: PIVOT PIN	EA	6

(1) ILLUSTRATION (a) FIG NO.	(b) ITEM NO.	(2) SMR CODE	(3) FEDERAL STOCK NUMBER	(4) PART NUMBER	(5) FSCM	(6) DESCRIPTION USABLE ON CODE	(7) U/M	(8) QTY INC IN UNIT
3	7	XBOZZ		3001559-8	92392	WASHER: PIVOT PIN	EA	12
3	9	PAOZZ		205000	36251	FITTING, LUBRICATION	EA	11
3	10	PAOZZ	5315-00-253-3410	3045055-5	92392	PIN, PIVOT	EA	6
3	12	PAOZZ	5315-00-115-1489	3050040-9	92392	PIN, PIVOT, BOOM	EA	2
3	14	XBOZZ		3044963-1	92392	WASHER: PIVOT PIN	EA	2
3	15	PAOZZ		924130-8	92392	NUT, LOCKING: PIVOT PIN	EA	2
3	16	PAOZZ	4730-00-050-4208	924178-7	92392	FITTING, LUBRICATION: BOOM	EA	4
3	19	PAOZZ	5315-00-115-1487	3045107-4	92393	PIN, PIVOT, BOOM CYLINDER	EA	2
3	20	PAOZZ	5315-00-115-1498	3045059-5	92392	PIN, LINK TO BUCKET	EA	4
3	21	XBOZZ	3805-00-139-4353	3050174-6	92392	LINK, ASSEMBLY, DUMP	EA	2
						GROUP 02 - BUCKET AND BOOM HYDRAULIC LINES, AND HYDRAULIC RESERVOIR		
4	1	PCOZZ	4720-00-115-0248	8710	80194	HOSE ASSEMBLY: CLAM CYLINDER	EA	4
4	2	PAOZZ		64754	80194	CLAMP: CROSS TANK	EA	2
4	3	PAOZZ		MS35690-605	96906	NUT, PLAIN, HEXAGON: TUBE CLAMP, 3/8 IN. NC	EA	1
4	4	PAOZZ		211548	80194	TUBE ASSEMBLY: VERTICAL, LEFT SIDE	EA	1
4	5	PAOZZ	4730-00-231-3016	920751-5	92392	ELBOW, PIPE TO TUBE: VERTICAL TUBES	EA	2
4	6	PAOZZ		26463	80194	TUBE ASSEMBLY: HORIZONTAL	EA	4
4	7	PAOZZ		211549	80194	HOSE ASSEMBLY: BOOM TO BUCKET	EA	2
4	8	PAOZZ	4710-00-401-9417	211547	80194	TUBE ASSEMBLY: VERTICAL, RIGHT SIDE	EA	1
5	1	MOOOO		3050849-3	92392	HOSE ASSEMBLY: TO DUMP CYLINDER	EA	4
						MANUFACTURE FROM:		
5		PAOZZ	4730-00-203-3551			FITTING, 1 REQUIRED	EA	
5		PAOZZ	4730-00-738-7543			FITTING, 1 REQUIRED	EA	
5		PCOZZ	4720-00-639-9899			HOSE, 36 INCHES REQUIRED	EA	
5	2	PAOZZ	3830-00-852-5887	921116-0	92392	FLANGE, SPLIT: HOSE AND TUBE MTG	EA	8
5	3	PCOZZ	5330-00-110-5685	923718-1	92392	PACKING, PREFORMED: SPLIT FLANGE	EA	4
5	4	PAOZZ		MS35301-62	96906	SCREW, CAP, HEXAGON HEAD: SPLIT FLANGE MTG	EA	16
5	5	PAOZZ	5310-00-037-9541			WASHER, LOCK: SPLIT FLANGE AND CLAMP MTG	EA	24
5	6	PAOZZ		MS90726-68	96906	SCREW, CAP, HEXAGON HEAD: CLAMP MTG	EA	8
5	7	PAOZZ		MS35691-625	96906	NUT, PLAIN, HEXAGON: CLAMP MTG	EA	16
5	8	XBOZZ		3044134-9	92392	CLAMP: CROSS TUBE	EA	8
5	9	PAOZZ	4710-00-168-1850	3044155-4	92392	TUBE ASSEMBLY: CROSS FRAME	EA	1
5	10	PAOZZ	4710-00-168-1845	3044154-7	92392	TUBE ASSEMBLY: CROSS FRAME	EA	1
5	11	PAOZZ	4710-00-168-1851	3044112-5	92392	TUBE ASSEMBLY: CROSS FRAME	EA	1
5	12	PAOZZ	4710-00-168-1819	3050841-0	92392	TUBE ASSEMBLY: TO DUMP CYLINDER	EA	1
5	13	PAOZZ	4710-00-168-1844	3050842-8	92392	TUBE ASSEMBLY: TO DUMP CYLINDER	EA	1
5	14	PAOZZ	4710-00-168-1844	3050842-8	92392	TUBE ASSEMBLY: TO DUMP CYLINDER	EA	1

(1) ILLUSTRATION (a) FIG NO.	(b) ITEM NO.	(2) SMR CODE	(3) FEDERAL STOCK NUMBER	(4) PART NUMBER	(5) FSCM	(6) DESCRIPTION USABLE ON CODE	(7) U/M	(8) QTY INC IN UNIT
5	15	XBOZZ		3050808-9	92392	CLAMP: TUBE MTG	EA	4
5	16	PAOZZ	5305-269-2814	MS90726-70	96906	SCREW, CAP, HEXAGON HEAD: CLAMP MTG	EA	2
5	17	PAOZZ	5305-226-7768	MS90726-115	96906	SCREW, CAP, HEXAGON HEAD: BRACKET MTG	EA	2
5	18	PAOZZ	5310-877-5795	503322	00000	NUT, SELF-LOCKING, HEXAGON: BRACKET MTG	EA	2
5	19	XBOZZ		3050817-0	92392	BRACKET: CROSS FRAME TUBES	EA	1
5	20	MOOOO		3050847-7	92392	HOSE ASSEMBLY: LIFT, LEFT MANUFACTURE FROM:	EA	1
5		PAOZZ		FC9436-16-94	01276	COUPLING, AS REQUIRED	EA	
5		PCOZZ	4720-930-5389			HOSE, AS REQUIRED	EA	
5	20	MOOOO		3050848-5	92392	HOSE ASSEMBLY: LIFT, RIGHT MANUFACTURE FROM:	EA	1
5		PAOZZ		FC9436-16-94	01276	COUPLING, 2 EA	EA	
5		PCOZZ	4720-930-5389			HOSE, AS REQUIRED	EA	
5	21	MOOOO		3050846-9	92392	HOSE ASSEMBLY: LOWER, RIGHT MANUFACTURE FROM:	EA	1
5		PAOZZ		FC9436-16-94	01276	COUPLING, 2 EA	EA	
5		PCOZZ	4720-930-5389			HOSE, AS REQUIRED	EA	
5	21	MOOOO	4720-930-5389	3050845-1	92392	HOSE ASSEMBLY: LOWER, LEFT MANUFACTURE FROM:	EA	1
5		PAOZZ		FC9436-16-94	01276	COUPLING, AS REQUIRED	EA	
5		PCOZZ	4720-930-5389			HOSE, AS REQUIRED	EA	
5	22	PAOZZ		921117-8	92392	FLANGE, SPLIT: TUBE MTG	EA	8
5	23	PCOZZ		923664-7	92392	PACKING, PREFORMED: SPLIT FLANGE	EA	4
5	24	PAOZZ	5305-069-5574	MS90725-86	96906	SCREW, CAP, HEXAGON HEAD: SPLIT FLANGE MTG	EA	16
5	25	PAOZZ		MS35338-9	96906	WASHER, LOCK: SPLIT FLANGE MTG	EA	16
6	1	PAOZZ	4710-115-0510	3050404-7	92392	TUBE ASSEMBLY: DEMAND VALVE TO STRAIGHT VALVE	EA	1
6	2	PAOZZ		922974-1	92392	ELBOW, PIPE TO TUBE: DEMAND VALVE TUBE	EA	2
6	3	PAOZZ	4710-143-8994	3044170-3	92392	TUBE ASSEMBLY: STRAIGHT VALVE TO CONTROL VALVE	EA	1
6	4	PAOZZ	4710-115-0509	3050421-1	92392	TUBE ASSEMBLY: DEMAND VALVE TO STRAIGHT VALVE	EA	1
6	5	PAOZZ	5305-269-3211	MS90725-60	96906	SCREW, CAP, HEXAGON HEAD: SPLIT FLANGE MTG	EA	4
6	6	PAOZZ	5310-637-9541	MS35338-46	96906	WASHER, LOCK: HOSE CLAMP, SPLIT FLANGE	EA	6
6	7	PAOZZ	3830-852-5887	921116-0	90940	FLANGE, SPLIT: TUBE MTG	EA	4
6	8	PCOZZ	5330-110-5685	923718-1	92392	PACKING, PREFORMED: TUBE MTG	EA	1
6	9	PAOZZ	5305-269-3209	MS90725-58	96906	SCREW, CAP, HEXAGON HEAD: HOSE CLAMP	EA	2
6	10	XBOZZ		3002196-8	92392	CLAMP, LOOP: HYDRAULIC HOSE	EA	2
6	11	PAOZZ	4710-115-0506	3050434-4	92392	TUBE ASSEMBLY: TANK TO SUCTION TUBE	EA	1
6	12	PAOZZ	4710-115-0507	3050441-9	92392	TUBE ASSEMBLY: SUCTION TUBE TO PUMP	EA	1
6	13	PAOZZ		921203-6	92392	ELBOW, PIPE TO HOSE: TUBE MTG	EA	1
6	14	PCOZZ		923664-7	92392	PACKING, PREFORMED: ELBOW	EA	1
6	15	XBOZZ		3001437	92392	CLAMP, LOOP: HYDRAULIC LINE	EA	2
6	16	PAOZZ	5305-269-2803	MS90726-60	96906	SCREW, CAP, HEXAGON HEAD: CLAMP MTG, 3/8 X 1 IN.	EA	1
6	17	MOOOO		3050854-3	92392	HOSE ASSEMBLY: STRAIGHT VALVE TO CONTROL VALVE MANUFACTURE FROM:	EA	1
6		PCOZZ	4720-639-9899			HOSE, AS REQUIRED	EA	

	NO.	NO.	CODE	NUMBER	NUMBER	FSCM	USABLE ON CODE
C	6	18	PAOZZ	4710-115-0508	3051184-4	92392	TUBE ASSEMBLY: HOSE TO DEMAND VALVE
C	6	19	PAOZZ	4730-738-7543	190263-12	01276	ELBOW, PIPE TO TUBE: HYDRAULIC HOSE
C	6	20	MOOOO		3051186-9	92392	HOSE ASSEMBLY: PUMP TO DEMAND VALVE MANUFACTURE FROM:
C	6		PAOZZ	4730-203-3551			FITTING, 1 REQUIRED
C	6		PAOZZ	4730-738-7543			FITTING, 1 REQUIRED
C	6		PCOZZ	4720-639-9899			HOSE, AS REQUIRED
C	7	1	PCOZZ	5330-110-5685	923718-1	92392	PACKING, PREFORMED: HOSE MTG
C	7	2	PAOZZ	4710-168-1849	3050821-2	92392	TUBE ASSEMBLY: VALVE TO CLAM CYLINDER
C	7	3	XBOZZ		3011248-6	92392	CLAMP, LOOP: CROSSOVER TUBE
C	7	4	PAOZZ	5310-261-7340	MS35338-8	96906	WASHER, LOCK: HOSE CLAMP, 3/8 IN.
C	7	5	PAOZZ	5305-269-3209	MS90725-58	96906	SCREW, CAP, HEXAGON HEAD: CLAMP MTG, 3/8-16 THD SIZE, 3/4 IN. LG
C	7	6	MOOOO		3050813-9	92392	HOSE ASSEMBLY: VALVE TO CLAM CYLINDER. MANUFACTURE FROM:
C	7		PAOZZ	4730-203-3551			FITTING, 1 REQUIRED
C	7		PAOZZ	4730-930-4524			FITTING, 1 REQUIRED
C	7		PCOZZ	4720-639-9899			HOSE, AS REQUIRED
C	7	7	PAOZZ		210295-125	01276	NUT, LOCKING: BULKHEAD FITTING
C	7	8	PAOZZ	4710-115-0528	925031-7	92392	FITTING, BULKHEAD: HYDRAULIC HOSE
C	7	9	PAOZZ	4710-168-1813	3050810-5	92392	TUBE ASSEMBLY: VALVE TO CLAM CYLINDER
C	7	10	XBOZZ		78067	80194	CLAMP, LOOP: HOSE TO FRAME
C	7	11	MOOOO		3050812-1	92392	HOSE ASSEMBLY: VALVE TO CLAM CYLINDER MANUFACTURE FROM:
C	7		PAOZZ		FC9434-16-94	01276	COUPLING, 1 REQUIRED
C	7		PCOZZ	4720-930-5389			HOSE, 60 IN. REQUIRED
C	7	12	PAOZZ	4710-115-0529	3050805-5	92392	TUBE ASSEMBLY: VALVE TO CLAM CYLINDER
C	7	13	PAOZZ	5305-269-3209	MS90725-58	96906	SCREW, CAP, HEXAGON HEAD: SPLIT FLANGE MTG
C	7	14	PAOZZ	5310-637-9541	MS35338-46	96906	WASHER, LOCK: SPLIT FLANGE MTG
C	7	15	PAOZZ	4710-168-1817	3050818-8	92392	TUBE ASSEMBLY: VALVE TO CLAMP CYLINDER
C	7	16	PAOZZ	5305-983-7452	MS16998-78	96906	SCREW, CAP, HEXAGON HEAD: VALVE TUBE MTG, 3/8-24 THD SIZE, 2 IN. LG
C	7	17	PAOZZ		3050819-6	92392	TUBE ASSEMBLY: VALVE TO CLAMP CYLINDER
C	7	18	PAOZZ	4730-114-0992	70916	70434	FLANGE, SPLIT: TUBE MTG
C	7	19	PAOZZ		3050822-0	92392	TUBE ASSEMBLY: VALVE TO CROSS FRAME
C	7	20	PAOZZ	4710-168-1847	3050823-8	92392	TUBE ASSEMBLY: VALVE TO CROSS FRAME
C	7	21	PAOZZ	4710-168-1824	3050824-6	92392	TUBE ASSEMBLY: VALVE TO CROSS FRAME
C	7	22	PAOZZ	4710-115-0524	3050825-3	92392	TUBE ASSEMBLY: VALVE TO CROSS FRAME
C	7	23	MOOOO		3050811-3	92392	HOSE ASSEMBLY: TUBE TO CROSS FRAME MANUFACTURE FROM:
	7		PAOZZ		FC9434-16-94	01276	COUPLING, 2 REQUIRED
C	7		PCOZZ	4720-930-5389			HOSE, AS REQUIRED
C	7	24	PAOZZ	4710-115-0525	3050843-6	92392	TUBE ASSEMBLY: HOSE TO CROSS FRAME
C	7	25	PAOZZ	4710-115-0526	3050840-2	92392	TUBE ASSEMBLY: HOSE TO CROSS FRAME
C	7	26	PAOZZ	4710-168-1846	3050820-4	92392	TUBE ASSEMBLY: HOSE TO CLAM CYLINDER

NO.	NO.	CODE	NUMBER	NUMBER	FSCM	USABLE ON CODE	U/M	UNIT
7	27	PAOZZ	3830-852-5887	921116-0	92392	FLANGE, SPLIT: HOSE MTG	EA	8
7	28	PAOZZ	4710-115-0530	3050806-3	92392	TUBE ASSEMBLY: VALVE TO CLAM CYLINDER	EA	1
7		PAOZZ		3052530-7	92392	SHIM: CLAMP	EA	1
8	1	PCOZZ		923664-7	92392	PACKING, PREFORMED: HOSE TO VALVE	EA	10
8	2	PAOZZ	4710-115-0527	3051183-6	92392	TUBE ASSEMBLY: DEMAND VALVE TO TANK	EA	1
8	3	PAOZZ	5305-069-5574	916197	92392	SCREW, CAP, HEXAGON HEAD: SPLIT FLANGE	EA	20
8	4	PAOZZ	5310-010-3322	904267	92392	WASHER, LOCK: SPLIT FLANGE	EA	20
8	5	PAOZZ		921117-8	92392	FLANGE, SPLIT: HOSE MTG	EA	10
8	6	MOOOO		3050855-0	92392	HOSE ASSEMBLY: HYDRAULIC PUMP TO DEMAND VALVE MANUFACTURE FROM:	EA	1
8		PAOZZ		FC9440	01276	COUPLING, 1 REQUIRED	EA	
8		PAOZZ		FC9439-2016-94	01276	COUPLING, 1 REQUIRED	EA	
8		PCOZZ	4720-930-5389			HOSE, AS REQUIRED	EA	
8	7	XBOZZ		3015837-2	92392	CLAMP, LOOP: HOSE MTG	EA	1
8	8	PAOZZ	5305-269-2803	MS90726-60	96906	SCREW, CAP, HEXAGON HEAD: CLAMP MTG	EA	1
8	9	MOOOO		3050844-4	92392	HOSE ASSEMBLY: CONTROL VALVE TO DEMAND VALVE MANUFACTURE FROM:	EA	1
8		PAOZZ		FC9436-16-94	01276	COUPLING, 1 REQUIRED	EA	
8		PAOZZ		FC9436-2016-94	01276	COUPLING, 1 REQUIRED	EA	
8		PCOZZ	4720-930-5389			HOSE, AS REQUIRED	EA	
8	10	MOOOO		3050857-6	92392	HOSE ASSEMBLY: PUMP TO CONTROL VALVE MANUFACTURE FROM:	EA	1
8		PAOZZ		FC9439-2016-94	01276	COUPLING, AS REQUIRED	EA	
8		PAOZZ		FC9437-2016-94	01276	COUPLING, 1 REQUIRED	EA	
8		PCOZZ	4720-930-5389			HOSE, AS REQUIRED	EA	
8	11	MOOOO		3051185-1	92392	HOSE ASSEMBLY: DEMAND VALVE TO TANK MANUFACTURE FROM:	EA	1
8		PAOZZ	4730-738-7548			FITTING, 1 REQUIRED	EA	
8		PAOZZ	4730-738-7543			FITTING, 1 REQUIRED	EA	
8		PCOZZ	4720-639-9899			HOSE, AS REQUIRED	EA	
8	12	PAOZZ		921203-6	92392	ELBOW, PIPE TO TUBE: HOSE TO TANK	EA	1
8	13	PAOZZ	5310-543-5973	MS35691-65	96906	NUT, PLAIN, HEXAGON: CLAMP MTG	EA	1
9	1	PCOZZ	5330-115-1457	923578-9	92392	PACKING, PREFORMED: TUBE TO PUMP	EA	2
9	2	PAOZZ	4730-115-0250	23604-24X	99103	FLANGE, PIPE: TUBE TO PUMP	EA	2
9	3	PAOZZ	5310-010-3323	MS35338-10	96906	WASHER, LOCK: PIPE FLANGE MTG	EA	8
9	4	PAOZZ		MS35297-111	96906	SCREW, CAP, HEXAGON HEAD: PIPE FLANGE MTG	EA	8
9	5	PAOZZ	4710-168-1810	3050435-1	92392	TUBE ASSEMBLY, SUCTION: TANK TO PUMP	EA	1
9	6	PAOZZ		36P	66295	CLAMP, HOSE: CONNECTING HOSE	EA	4
9	7	MOOOO		3020955-5	92392	HOSE, CONNECTING: TUBE TO TUBE MANUFACTURE FROM:	EA	2
9		PCOZZ	4720-640-0362			HOSE, AS REQUIRED	EA	
9	8	PAOZZ	4710-168-1820	3045837-6	92392	TUBE ASSEMBLY, SUCTION: TANK TO PUMP	EA	1
10	1	PAOZZ	5310-010-3323	MS35338-10	96906	WASHER, LOCK: SPLIT FLANGE	EA	8
10	2	PAOZZ	5305-042-6417	MS90725-121	96906	SCREW, CAP, HEXAGON HEAD: SPLIT FLANGE	EA	8

	(1) ILLUSTRATION (a) FIG NO.	(b) ITEM NO.	(2) SMR CODE	(3) FEDERAL STOCK NUMBER	(4) PART NUMBER	(5) FSCM	(6) DESCRIPTION USABLE ON CODE	(7) U/M	(8) QTY INC IN UNIT
C	10	3	PAOZZ	4730-470-6419	921118-6	92392	FLANGE, SPLIT: TUBE MTG	EA	4
C	10	4	PAOZZ	4710-168-1818	3045859-0	92392	TUBE ASSEMBLY: TANK TO VALVE	EA	1
C	10	5	PAOZZ	4730-702-2750	MS35842-3	96906	CLAMP, HOSE: CONNECTING HOSE	EA	4
C	10	6	PCOZZ	4720-640-5439	70144	64104	HOSE, CONNECTING: TANK TO VALVE TUBE	EA	1
C	10	7	PAOZZ	6680-115-0523	3050833-7	92392	DIP STICK: HYDRAULIC TANK	EA	1
C	10	8	PAOZZ	4710-168-1822	3045855-8	92392	TUBE ASSEMBLY: TANK TO VALVE	EA	1
C	10	9	PCOZZ	5330-115-1456	923587-0	92392	PACKING, PREFORMED: TUBE TO TANK	EA	2
C	10	10	PAOZZ	2590-133-9981	4004	01943	CAP ASSEMBLY: OIL FILLER	EA	1
C	10	11	PAOZZ	5305-269-2807	MS90726-64	96906	SCREW, CAP, HEXAGON HEAD: COVER MTG	EA	4
C	10	12	PAOZZ	5310-261-7340	MS35338-8	96906	WASHER, LOCK: COVER MTG	EA	4
C	10	13	XBOZZ		3044842-7	92392	COVER: TANK	EA	1
C	10	14	PAOOO	2590-133-9980	V110-16M	91561	VALVE ASSEMBLY: PRESSURE RELIEF	EA	1
C	10	15	PAOZZ		6302-18	91561	WASHER, LOCK: VALVE MTG	EA	2
C	10	16	PAOZZ		6211-031	91561	SCREW: VALVE MTG	EA	2
:	10	17	PCOZZ	5330-115-1467	TS33-440	91265	PACKING, PREFORMED: COVER MTG	EA	2
:	10	18	PAOZZ	4320-656-7471	2343B058	78252	STRAINER, OIL	EA	1
:	10	19	XBOZZ		3045887-1	92392	BRACKET ASSEMBLY, STRAINER	EA	1
C	10	20	XBOZZ		3045873-1	92392	BAIL, STRAINER	EA	1
C	10	21	XBOZZ		3019231-4	92392	BAFFLE, STRAINER	EA	1
C	10	22	PAOZZ	2590-115-0522	3032277-0	92392	STRAINER, OIL	EA	1
C	10	23	XBOZZ		3011349-2	92392	MAGNET, STRAINER	EA	1
C	10	24	PCOZZ	5330-115-1458	923922-9	92392	PACKING, PREFORMED: MAGNET	EA	1
C	10	26	PCOZZ		2155	79150	GASKET: DRAIN PLUG	EA	1
C	10	27	PAOZZ		3010159-6	92392	PLUG ASSEMBLY, DRAIN	EA	1
C	10	32	PAOZZ	4330-168-1861	6666492	81321	FILTER	EA	1
C	10	33	XBOZZ		3045784-0	92392	PLATE, BY-PASS VALVE	EA	1
C	10	34	PAOZZ	4820-115-0247	M2361-9-15	92863	VALVE, BY-PASS	EA	1
C	10	35	PAOZZ	5305-269-2805	MS90726-62	96906	SCREW, CAP, HEXAGON HEAD: COVER MTG	EA	4
C	10	36	XBOZZ		3045324-5	92392	COVER, FILTER	EA	1
							GROUP 03 - BUCKET AND BOOM CYLINDERS		
C	11	1	PAOZZ	2520-133-9967	R111	78643	BALL JOINT: INDICATOR ROD	EA	1
C	11	2	PAOZZ		MS35691-825	96906	NUT, JAM, HEXAGON: BALL JOINT, 1/2-20 THD SIZE	EA	1
C	11	3	XBOZZ		654274-1	92392	TUBE ASSEMBLY, INDICATOR ROD	EA	1
N	11	4	XBOZZ		664373-8	92392	TRANSFER POSITION INDICATOR	EA	1
C	11	5	PAOZZ	5305-558-4901	MS35301-62	96906	SCREW, CAP, HEXAGON HEAD: INDICATOR MTG, 3/8-16 THD SIZE, 1 1/4 IN. LG	EA	2
C	11	6	PAOZZ	5310-261-7340	MS35338-8	96906	WASHER, LOCK: INDICATOR MTG, 3/8 IN. DIA	EA	2
C	11	7	PAOZZ	5310-012-0377	MS35690-605	96906	NUT, PLAIN, HEXAGON: INDICATOR MTG, 3/8-16 THD SIZE	EA	2
C	11	8	PAOZZ	5310-010-3323	MS35338-10	96906	WASHER, LOCK: BALL JOINT, 1/2 IN. DIA	EA	1
C	11	9	PAOZZ	5310-265-9217	MS35690-825	96906	NUT, PLAIN, HEXAGON: BALL JOINT, 1/2-20 THD SIZE	EA	1
C	12		PAOHH	3805-043-5344	3050878-2	92392	CYLINDER ASSEMBLY, RIGHT: DUMP (COMPONENTS SAME AS CYLINDER ASSEMBLY, FSN 3805-010-0250, EXCEPT WHERE INDIVIDUAL COMPONENTS ARE ANNOTATED)	EA	1

(1) ILLUSTRATION (a) FIG NO.	(b) ITEM NO.	(2) SMR CODE	(3) FEDERAL STOCK NUMBER	(4) PART NUMBER	(5) FSCM	(6) DESCRIPTION USABLE ON CODE	(7) U/M	(8) QTY INC IN UNIT
12		PAOHH	3830-00-010-0205	3050877-4	92392	CYLINDER ASSEMBLY, LEFT: DUMP	EA	1
12	12	PCOZZ	5330-00-110-5685	923718-1	92392	PACKING, PREFORMED: TUBE MTG	EA	2
12	13	PCOZZ	3830-00-852-5887	921116-0	90940	FLANGE, SPLIT	EA	4
12	14	PAOZZ	5310-00-637-9541	MS35338-46	96906	WASHER, LOCK: SPLIT FLANGE	EA	8
12	15	PAOZZ	5305-00-558-4901	MS35301-62	96906	SCREW, CAP, HEXAGON HEAD: SPLIT FLANGE MTG, 3/8 IN. NC X 1 1/4 IN.	EA	8
12	16	XBOZZ		TC12	75272	CLAMP, LOOP: TUBE	EA	2
12	24	PAOZZ	4710-00-168-1821	3051118-2	92392	TUBE ASSEMBLY	EA	2
		XBOZZ		3061905	92392	ROD, BUCKET LEVEL INDICATOR	EA	1
13		PAOHH	3805-00-010-0199	3050872-5	92392	CYLINDER ASSEMBLY, LIFT, RIGHT (COMPONENTS SAME AS CYLINDER ASSEMBLY, NSN 3805-00-043-5343, EXCEPT WHERE INDIVIDUAL COMPONENTS ARE ANNOTATED)	EA	1
13		PAOHH	3805-00-043-5343	3050871-7	92392	CYLINDER ASSEMBLY, LIFT, LEFT	EA	1
14		PAOHH	3805-00-927-4961	501680	80194	CYLINDER ASSEMBLY, CLAM, RIGHT (COMPONENTS SAME AS CYLINDER ASSEMBLY, NSN 3805-00-010-0202, EXCEPT WHERE INDIVIDUAL COMPONENTS ARE ANNOTATED)	EA	1
14		PAOHH	3805-00-010-0202	501681	80194	CYLINDER ASSEMBLY, CLAM, LEFT	EA	1
14	1	PAOZZ	4730-00-050-4208	MS15003-1	96906	FITTING, LUBRICATION: ROD ASSEMBLY	EA	1
14	16	PCOZZ	5330-00-842-8341	921349-7	92392	PACKING, PREFORMED: FITTING	EA	4
14	17	PAOZZ		923080-6	92392	ADAPTER, PIPE TO HOSE	EA	4
						GROUP 04 - BUCKET AND BOOM HYDRAULIC CONTROL VALVE, CONTROLS AND MAIN HYDRAULIC PUMP		
15	1	PAOZZ		3001171-2	92392	KNOB, CONTROL	EA	2
15	2	PAOZZ	5305-00-206-0996	171123	24617	SCREW, CAP, HEXAGON HEAD: PLATE MTG	EA	3
15	3	PAOZZ	5310-00-637-9541	MS35338-46	96906	WASHER, LOCK: PLATE MTG, BALL JOINT MTG	EA	14
15	4	PAOZZ		MS15975-15	96906	WASHER, FLAT: PLATE MTG	EA	11
15	5	XBOZZ		3051096-0	92392	PLATE, COVER	EA	1
15	6	XBOZZ		3051966-4	92392	LEVER ASSEMBLY, CLAMP AND DUMP CONTROL	EA	1
15	7	PAOZZ	5305-00-206-0996	171123	24617	SCREW, CAP, HEXAGON HEAD: SUPPORT PLATE	EA	1
15	8	XBOZZ		3051945-8	92392	PLATE, SUPPORT	EA	1
15	9	PAOZZ	5306-00-896-9724	3020874-8	92392	PIN: CLAMP LEVER	EA	1
15	10	PAOZZ		70925041	92392	BEARING, ROD END	EA	2
15	11	PAOZZ	5310-00-656-0227	MS35691-825	96906	NUT, JAM, HEXAGON: YOKE ADJUSTING, 1/2-20 THD SIZE	EA	8
15	12	PAOZZ	5315-00-115-6267	3025958-4	92392	PIN, STRAIGHT, HEADED: CLEVIS	EA	3
15	13	PAOZZ	5340-00-115-1469	3043676-0	92392	CLEVIS, ROD END	EA	3
15	14	PAOZZ	5315-00-839-5822	MS24665-353	96906	PIN, COTTER: ROD END	EA	3
15	15	XBOZZ		3051944-1	92392	ROD, CONTROL, CLAMP	EA	1
15	16	XBOZZ		3051900-3	92392	LEVER ASSEMBLY	EA	1
15	17	PAOZZ	3120-00-287-6571	AA1049-14	70417	BEARING, SLEEVE	EA	2
15	18	PAOZZ	5315-00-115-1491	922419-7	92392	PIN, SPRING	EA	2
15	19	PAOZZ		917666-0	92392	CLEVIS, ROD END	EA	2
15	20	XBOZZ		3051082-0	92392	LEVER (USED ON LEVER ASSEMBLY, P/N 3051900-3 (92392), ONLY)	EA	1

	(1) ILLUSTRATION (a) FIG NO.	(b) ITEM NO.	(2) SMR CODE	(3) FEDERAL STOCK NUMBER	(4) PART NUMBER	(5) FSCM	(6) DESCRIPTION USABLE ON CODE	(7) U/M	(8) QTY IN H UN
	15	21	XBOZZ		3051898-9	92392	LEVER ASSEMBLY (COMPONENTS SAME AS LEVER ASSEMBLY, P/N 3051900-3 (92392) EXCEPT WHERE INDIVIDUAL COMPONENTS ARE ANNOTATED)	EA	
	15	22	XBOZZ		3051083-8	92392	LEVER (USED ON LEVER ASSEMBLY, P/N 3051898-9 (92392), ONLY)	EA	1
	15	23	XBOZZ		3051049-9	92392	SPACER, SHAFT	EA	1
	15	24	XBOZZ		3051051-5	92392	SHAFT, LEVER	EA	2
	15	25	XBOZZ		3051943-3	92392	ROD CONTROL, DUMP	EA	1
	15	26	XBOZZ		3051047-3	92392	TUBE, SHAFT	EA	1
	15	27	XBOZZ		3051052-3	92392	ROD, THREADED	EA	1
	15	28	PAOZZ		122236	00000	NUT, PLAIN, HEXAGON: BALL JOINT	EA	4
	15	29	PAOZZ	3930-00-940-5303	R109	78643	BALL JOINT	EA	2
	15	30	XBOZZ		3051088-7	92392	SUPPORT, CONTROL	EA	1
	15	31	PAOZZ	5305-00-269-3209	MS90725-58	96906	SCREW, CAP, HEXAGON HEAD: CONTROL SHAFT	EA	4
C	15	32	PAOZZ	5305-00-269-3214	MS90725-64	96906	SCREW, CAP, HEXAGON HEAD: SUPPORT MTG	EA	4
	15	33	XBOZZ		3051980-5	92392	LEVER ASSEMBLY, BOOM CONTROL	EA	1
	15	34	XBOZZ		3051942-5	92392	ROD, CONTROL	EA	1
	15	35	PAOZZ	3120-00-115-1398	3007065-0	92392	BEARING, SLEEVE	EA	1
	15	36	XBOZZ		3051964-9	92392	LEVER, CONTROL	EA	1
	15	37	PAOZZ		922419-7	92392	PIN, SPRING	EA	1
	15	38	PAOZZ	5310-00-809-8533	MS27183-23	96906	WASHER, FLAT: SHAFT	EA	2
	15	39	XBOZZ		3052005-0	92392	SPACER, SHAFT	EA	1
	15	40	XBOZZ		3051053-1	92392	ROD, THREADED	EA	1
	15	41	XBOZZ		3051048-1	92392	SPACER, SHAFT	EA	1
	21	1	PAOZZ	5305-00-042-6417	MS90725-113	96906	SCREW, CAP, HEXAGON HEAD: PUMP MTG	EA	4
	21	2	PAOZZ	5310-00-010-3323	MS35338-10	96906	WASHER, LOCK: PUMP MTG	EA	4
	21	3	PAOHH	3805-00-010-0204	D230-29	13829	PUMP ASSEMBLY, HYDRAULIC	EA	1
							GROUP 05 - LIGHTS		
	23	1	PAOOO	6220-00-337-6471	8378786	00000	LAMP UNIT, TAIL, BLACKOUT	EA	1
	23	2	PAOZZ	6220-00-752-6018	7526018	00000	DOOR ASSEMBLY, LIGHT	EA	1
	23	3	PCOZZ	5330-00-297-7106	7320658	00000	GASKET: DOOR	EA	1
	23	4	PAOZZ	6240-00-019-0877	190877	00000	LAMP, INCANDESCENT	EA	2
	23	5	PAOZZ	6250-00-353-0955	8378662	00000	SOCKET ASSEMBLY, LAMP	EA	1
	23	6	PAOZZ		MS35206-242	96906	SCREW, MACHINE: SOCKET MTG	EA	4
	23	7	PAOZZ		121841	00000	WASHER, LOCK: SOCKET MTG	EA	4
	23	8	XAOZZ	6220-00-368-4945	7525997	19207	BODY, LIGHT	EA	1
	23	9	PAOZZ		904206-0	92392	WASHER, LOCK: LAMP MTG, 3/8 IN. ID	EA	2
	23	10	PAOZZ		915408-9	92392	SCREW, MACHINE: LAMP MTG, 3/8-16 X 3/4 IN. LG	EA	2
C	24	1	PAOOO	6220-00-904-0156	10920548-2	00000	LIGHT, PARKING AND TURN W/AMBER LENS, COVER (COMPONENTS SAME AS LAMP, NSN 6220-00-880-1237)	EA	2
C	24	1	PAOOO	6220-00-880-1237	10920548-1	19207	LAMP UNIT, STOP, TURN, AND TAIL WITH RED LENS COVER	EA	2
C	24	2	PAOZZ		3057688-8	92392	LENS, COVER AMBER (COMPONENT OF LIGHT, NSN 6220-00-904-0156)	EA	4
N	24	2	PAOZZ	6220-00-903-6647	10920506	19207	LENS, COVER, RED (COMPONENT OF LAMP UNIT, NSN 6220-00-880-1237)	EA	2

	(1) ILLUSTRATION (a) FIG NO.	(b) ITEM NO.	(2) SMR CODE	(3) FEDERAL STOCK NUMBER	(4) PART NUMBER	(5) FSCM	(8) DESCRIPTION USABLE ON CODE	(7) U/M	(8) QTY INC IN UNIT
C	24	3	PCOZZ	6220-732-0658	7320658	00000	GASKET: LENS	EA	4
C	24	4	PAOZZ	6240-295-2668	MS35478-1691	96906	LAMP, INCANDESCENT	EA	4
C	24	5	PAOZZ	5935-111-8416	10930019	00000	SOCKET ASSEMBLY, LAMP	EA	4
C	24	6	XAOZZ	6220-368-4945	7525997	00000	BODY, LIGHT	EA	4
C	24	7	PAOZZ	5305-012-1832	121832	00000	SCREW, MACHINE: SOCKET WIRING MTG	EA	12
C	24	8	PAOZZ	5310-045-3299	MS35338-42	96906	WASHER, LOCK: SOCKET MTG	EA	8
C	24	9	PAOZZ	5305-899-3002	MS35206-242	96906	SCREW, MACHINE: SOCKET MTG	EA	8
C	24	10	PAOZZ	6240-044-6914	MS35478-1683	96906	LAMP, INCANDESCENT	EA	6
C	24	11	PAOZZ	5310-261-7340	904206-0	92392	WASHER, LOCK: LIGHT MTG, 3/8 IN. ID	EA	8
C	24	12	PAOZZ	5305-269-3209	MS90725-58	96906	SCREW, MACHINE: LIGHT MTG, 3/8-16 X 3/4 IN. LG	EA	8
C	25	1	PA000	6220-678-9046	MS51318-1	96906	LAMP UNIT, BLACKOUT	EA	2
C	25	2	PAOZZ	6220-695-1107	7525940	00000	DOOR ASSEMBLY	EA	1
C	25	3	XAOZZ	6220-819-7028	8747987	00000	UNIT AND WIRE ASSEMBLY	EA	1
C	25	4	XAOZZ	5935-572-9180	8338566	00000	SHELL, CONNECTOR	EA	1
C	25	5	XAOZZ	5310-833-8567	8338567X	00000	WASHER	EA	1
C	25	6	XAOZZ	5325-080-6147	8741442	00000	GROMMET	EA	1
C	25	7	XAOZZ	5935-807-4109	8741492	00000	CONNECTOR ASSEMBLY	EA	1
C	25	8	XAOZZ		8747986	00000	BODY ASSEMBLY, LIGHT	EA	1
C	25	9	PAOZZ	5310-350-2655	5294507	00000	WASHER, BEVEL	EA	1
C	25	10	PAOZZ		904206-0	92392	WASHER, LOCK: LIGHT MTG, 3/8 IN. ID	EA	1
C	25	11	PAOZZ		134566	00000	NUT, PLAIN, HEXAGON: LIGHT MTG, 3/8-16 THD SIZE	EA	1
C	25	12	XAOZZ	6220-693-4175	7320711	00000	SPRING: LAMP UNIT	EA	3
C	26	1	PA000	6240-111-3213	M12874	74400	LAMP UNIT, FLOODLIGHT (COMPONENTS SAME AS LAMP UNIT, FSN 6220-953-4653)	EA	5
C	26	1	PA000	6220-953-4653	M12876	74400	LAMP UNIT, HEADLIGHT	EA	1
C	26	2	XAOZZ	3930-828-3556	6081	74400	SHELL ASSEMBLY, LIGHT	EA	6
C	26	3	XAOZZ	6220-788-9943	5133	74400	RETAINER: LAMP	EA	6
C	26	4	PAOZZ	6240-643-0687	4578	92392	LAMP, INCANDESCENT: FLOOD LIGHT (U/O LAMP UNIT, FSN 6240-111-3213, ONLY)	EA	5
C	26	4	PAOZZ	6240-727-8573	4880	90940	LAMP, INCANDESCENT: HEADLIGHT (U/O LAMP UNIT, FSN 6620-953-4653, ONLY)	EA	1
C	26	5	XBOZZ		3051070-5	92392	SPACER: LIGHT MTG	EA	6
C	26	6	PAOZZ	5310-820-6653	MS35338-12	96906	WASHER, LOCK: LIGHT MTG, 5/8 IN. ID	EA	6
C	26	7	PAOZZ	5310-777-6325	MS51972-7	96906	NUT, PLAIN, HEXAGON: LIGHT MTG, 5/8-18 THD SIZE	EA	6
C	27	1	PAOZZ	2590-050-8821	5703317	19207	SWITCH, DIRECTIONAL	EA	1
C	27	2	PAOZZ	5310-045-3296			WASHER, LOCK: DIRECTIONAL SWITCH MTG, NO. 10 SCREW SIZE, INTERNAL TEETH	EA	2
C	27	3	PAOZZ	5305-042-4506			SCREW, MACHINE: DIRECTIONAL SWITCH MTG, NO. 10-32 THD SIZE, 1/2 IN. LG	EA	2
C	28	1	PAOZZ	5305-267-8977	MS90726-10	96906	SCREW, CAP, HEXAGON HEAD: HORN MTG, 1/4-28 THD SIZE, 1 1/4 IN. LG	EA	2
C	28	2	PAOZZ	2590-752-6286	765	90218	HORN	EA	1
C	28	3	PAOZZ	5310-582-5965	904204-5	92392	WASHER, LOCK: HORN MTG, 1/4 IN. SCREW SIZE	EA	2
C	28	4	PAOZZ		MS35690-425	96906	NUT, PLAIN, HEXAGON: HORN MTG, 1/4-28 THD SIZE	EA	2

(1) ILLUSTRATION (a) FIG NO.	(b) ITEM NO.	(2) SMR CODE	(3) NATIONAL STOCK NUMBER	(4) PART NUMBER	(5) FSCM	(6) DESCRIPTION USABLE ON CODE	(7) U/M	(8) QTY INC IN UNIT
28		XBOZZ		3052090-2	92392	WIRE ASSEMBLY, HORN	EA	1
29	1	PAOZZ	5310-00-080-6004	MS15795-14	96906	WASHER, FLAT: BATTERY HOLD-DOWN, 3/8 IN. ID	EA	5
29	2	PAOZZ	5310-00-543-4717	MS35425-28	96906	NUT, PLAIN, WING: BATTERY HOLD-DOWN, 3/8-16 THD SIZE	EA	5
29	3	PAOZZ	2920-00-983-6643	6428869-2	90940	BRACKET, BATTERY HOLD-DOWN	EA	1
29	4	PAOZZ		MS75004-2	96906	LUG, BATTERY	EA	2
29	5	PAOZZ	6140-00-135-0223	3050918-6	92392	CABLE, JUMPER	EA	1
29	6	PAOZZ	5940-00-246-4891	3029291-6	92392	LUG, BATTERY	EA	2
29	7	PAOZZ	6140-00-135-0225	3050917-8	92392	CABLE ASSEMBLY, NEGATIVE	EA	1
29	8	XBOZZ		3052169-4	92392	CLAMP: BATTERY CABLE	EA	1
29	9	PAOZZ	5310-00-010-3323	904208-6	92392	WASHER, LOCK: CABLE CLAMP	EA	1
29	10	PAOZZ	5305-00-781-3924	MS90725-107	96906	SCREW, CAP, HEXAGON HEAD: CABLE CLAMP	EA	1
29	11	XBOZZ		3050997-0	92392	BOX ASSEMBLY, BATTERY	EA	1
29	12	PAOZZ	5305-00-269-3209	MS90725-58	96906	SCREW, CAP, HEXAGON HEAD: BATTERY BOX COVER, 3/8-16 THD SIZE, 3/4 IN. LG	EA	3
29	13	PAOZZ	2920-00-133-9891	3050923-6	92392	COVER ASSEMBLY	EA	1
29	14	PAOZZ	5310-00-261-7340	904206-0	92392	WASHER, LOCK: COVER MTG, 3/8 IN. ID	EA	3
29	15	PAOZZ	5310-00-012-0377	MS35690-605	96906	NUT, PLAIN, HEXAGON: COVER MTG, 3/8-16 THD SIZE	EA	3
29	16	PAOZZ	3805-00-454-8102	3043841-0	92392	LATCH: COVER	EA	2
29	17	PAOZZ		923703-3	92392	SCREW, SELF-TAPPING: LATCH MTG, NO. 10-32 THD SIZE, 1/2 IN. LG	EA	4
29	18	PAOZZ	5306-00-089-1530	917340-2	92392	BOLT, SQUARE NECK: BATTERY HOLD-DOWN, 3/8-16 THD SIZE, 9 IN. LG	EA	5
29	19	PCOZZ		3050914-5	92392	CHANNEL, RUBBER: BATTERY CABLE	EA	1
29	20	PAOZZ		MS35690-605	96906	NUT, PLAIN, HEXAGON: BATTERY BOX MTG, 3/8-16 THD SIZE	EA	4
29	21	PAOZZ	5310-00-261-7340	904206-0	92392	WASHER, LOCK: BATTERY BOX MTG, 3/8 IN. ID	EA	4
29	22	PAOZZ	5310-00-186-7448	MS15795-14	96906	WASHER, FLAT: BATTERY BOX MTG, 3/8 IN. ID	EA	4
29	23	PAOZZ	5305-00-558-4901	MS35301-62	96906	SCREW, CAP, HEXAGON HEAD: BATTERY BOX MTG, 3/8-16 THD SIZE, 1 1/4 IN. LG	EA	4
29	24	PAOZZ	6140-00-135-0224	3050916-0	92392	CABLE ASSEMBLY, POSITIVE	EA	1
29	25	PAOZZ	6140-00-057-2554	MS35000-3	96906	BATTERY: 12 VOLT	EA	2
29	26	PCOZZ		3050915-2	92392	CHANNEL, RUBBER: BATTERY CABLE	EA	1
29		PAOZZ	6810-00-249-9354			ELECTROLYTE	GL	2
						GROUP 06 - HOOD, PANELS, SEAT, TOOL BOX		
29A	1	KEOZZ		700X11	34229	SUB ASSEMBLY	EA	1
29A	7	PBOZZ		788X18-3	34229	INSERT, RUBBER MOUNT	EA	8
29A	8	PBOZZ		788X18-5	34229	BUSHING, RUBBER MOUNT	EA	4
29A	9	PBOZZ		1616-2TAA	34229	SCREW, CAP, SAE GR8 1-8 THD SIZE, 6.5 IN. LG	EA	4
29A	10	PBOZZ		111-16AA	34229	NUT, SAE GR8, 1-8 THD SIZE	EA	4
29A	11	PBOZZ		1216-4	34229	WASHER, SHAKE PROOF, 1 IN. ID,	EA	4
29A	12	PBOZZ	5305-00-269-3216	1606-9AA	34229	SCREW, CAP, 3/8-16 THD SIZE, 2 IN. LG	EA	4
29A	13	PBOZZ	5310-00-056-3395	1111-6AA	34229	NUT, 3/8-16 THD SIZE	EA	4
29A	14	PBOZZ	5310-00-820-6652	1210-6	54229	WASHER LOCK, 3/8 IN. ID	EA	4
29A	16	PBOZZ		780V65	34229	TAPE, NON-SLIP BLACK, 1 IN. X 20 FT, ROLL	EA	1

(1) STRATION	(b) ITEM NO.	(2) SMR CODE	(3) NATIONAL STOCK NUMBER	(4) PART NUMBER	(5) FSCM	(6) DESCRIPTION USABLE ON CODE	(7) U/M	(8) QTY INC IN UNIT
A	17	PBOZZ		780V72	34229	PLATE, INSTRUCTION	EA	1
B	1	PBOZZ		43115	29944	BELT, SEAT ASSEMBLY	EA	1
	3	PBOZZ		13220E6588	97403	PLATE, DATA TRANSPORTATION	EA	1
	4	PBOZZ	5305-00-253-5615	MS21318-21	96906	SCREW, DRIVE, ROUND HEAD STEEL NO 4 X 0.25 IN. LG	EA	4
	1	PAOZZ		MS35691-625	96906	NUT, PLAIN, HEXAGON: HOOD MTG, 3/8-24 THD SIZE	EA	2
	2	PAOZZ	5310-00-637-9541	MS35338-46	96906	WASHER, LOCK: HOOD MTG, 3/8 IN. ID	EA	2
	3	PAOZZ	5310-00-186-7448	MS15795-14	96906	WASHER, FLAT: HOOD MTG, 3/8 IN. ID	EA	2
	4	PAOZZ	5305-00-269-2803	MS90726-60	96906	SCREW, CAP, HEXAGON HEAD: HOOD MTG, 3/8-24 THD SIZE, 1 IN. LG	EA	2
	5	XBOZZ		3045858-2	92392	HOOD, ENGINE	EA	1
	6	PAOZZ	5305-00-206-0996	171123	24617	SCREW, SELF-TAPPING: COVER PLATE MTG, 3/8-16 THD SIZE, 3/4 IN. LG	EA	8
	7	XBOZZ		3051036-6	92392	PLATE, COVER, LIGHT: RH	EA	2
	7	XBOZZ		3051037-4	92392	PLATE, COVER, LIGHT: LH	EA	2
	8	XBOZZ	3805-00-762-1619	3051023-4	92392	GRILLE, RADIATOR	EA	1

	(1) ILLUSTRATION (a) FIG NO.	(b) ITEM NO.	(2) SMR CODE	(3) FEDERAL STOCK NUMBER	(4) PART NUMBER	(5) FSCM	(6) DESCRIPTION USABLE ON CODE	(7) U/M	(8) QTY INC IN UNIT
C	30	9	XBOZZ		3042646-4	92392	CLAMP: GRILLE	EA	4
C	30	10	PAOZZ	5310-637-9541	MS35338-46	96906	WASHER, LOCK: GRILLE MTG, 3/8 IN. ID	EA	4
C	30	11	PAOZZ	5305-269-3215	MS90725-65	96906	SCREW, CAP, HEXAGON HEAD: GRILLE MTG, 3/8-16 THD SIZE, 1 3/4 IN. LG	EA	4
C	30	12	PAOZZ		MS90727-165	96906	SCREW, CAP, HEXAGON HEAD: SUPPORT MTG, 5/8-18 THD SIZE, 2 1/4 IN. LG	EA	4
C	30	13	PAOZZ		MS27183-22	96906	WASHER, FLAT: SUPPORT MTG, 5/8 IN. ID	EA	4
C	30	14	PAOZZ	5310-982-6809	MS1044LN10	96906	NUT, SELF-LOCKING, HEXAGON: SUPPORT MTG, 5/8-18 THD SIZE	EA	4
C	30	16	XBOZZ	2510-423-0272	3052133-0	92392	FENDER, FRONT, RIGHT	EA	1
C	30	16	XBOZZ	2510-427-5689	3052132-2	92392	FENDER, FRONT, LEFT	EA	1
C	30	17	PAOZZ	5305-725-4187	MS90726-14	96906	SCREW, CAP, HEXAGON HEAD: FENDER MTG, 1/2-13 THD SIZE, 1 3/4 IN. LG	EA	12
C	30	18	PAOZZ	5310-010-3323	MS35338-10	96906	WASHER, LOCK: FENDER MTG, 1/2 IN. ID	EA	12
C	30	19	PAOZZ	5310-265-9217	MS35690-825	96906	NUT, PLAIN, HEXAGON: FENDER MTG, 1/2-20 THD SIZE	EA	12
C	30	20	XBOZZ		3043474-0	92392	FENDER, LEFT	EA	1
C	30	20	XBOZZ	3805-256-2643	3043475-7	92392	FENDER, RIGHT	EA	1
C	30	21	PAOZZ	5310-543-5973	MS35691-625	96906	NUT, PLAIN, HEXAGON: FENDER MTG, 3/8-24 THD SIZE	EA	6
C	30	22	PAOZZ	5310-637-9541	MS35338-46	96906	WASHER, LOCK: FENDER MTG, 3/8 IN. ID	EA	6
C	30	23	PAOZZ	5310-080-6004	MS15795-14	96906	WASHER, FLAT: FENDER MTG, 3/8 IN. ID	EA	6
C	30	24	XBOZZ		3044879-9	92392	SUPPORT, FENDER	EA	2
C	30	25	PAOZZ	5310-543-5973	MS35691-625	96906	NUT, PLAIN, HEXAGON: SHIELD MTG, 3/8-24 THD SIZE	EA	4
C	30	26	PAOZZ	5310-637-9541	MS35338-46	96906	WASHER, LOCK: SHIELD MTG, 3/8 IN. ID	EA	4
C	30	27	PAOZZ	5310-080-6004	MS15795-14	96906	WASHER, FLAT: SHIELD MTG, 3/8 IN. ID	EA	4
C	30	28	PAOZZ	5305-269-2803	MS90726-60	96906	SCREW, CAP, HEXAGON HEAD: FENDER MTG, 3/8-24 THD SIZE, 1 IN. LG	EA	6
C	30	29	PAOZZ	5305-269-2803	MS90726-60	96906	SCREW, CAP, HEXAGON HEAD: SHIELD MTG, 3/8-24 THD SIZE, 1 IN. LG	EA	4
C	30	30	PAOZZ	5305-269-2803	MS90726-60	96906	SCREW, CAP, HEXAGON HEAD: GRAB HANDLE MTG, 3/8-24 THD SIZE, 1 IN. LG	EA	2
C	30	31	XBOZZ		3052024-1	92392	HANDLE, GRAB	EA	1
C	30	32	PAOZZ		MS35338-46	96906	WASHER, LOCK: GRAB HANDLE MTG, 3/8 IN. ID	EA	2
C	30	33	PAOZZ	5310-543-5973	MS35691-625	96906	NUT, PLAIN, HEXAGON: GRAB HANDLE MTG, 3/8-24 THD SIZE	EA	2
C	30	34	XBOZZ	2510-423-0343	3052085-2	92392	SHIELD, AIR CLEANER	EA	1
C	30	35	PAOZZ	2540-115-0512	4354836-1	92392	LATCH, FENDER	EA	2
C	31	1	PAOZZ	5310-543-5973	MS35691-625	96906	NUT, PLAIN, HEXAGON: HANDRAIL MTG, 3/8-24 THD SIZE	EA	3
C	31	2	PAOZZ	5310-637-9541	MS35338-46	96906	WASHER, LOCK: HANDRAIL MTG, 3/8 IN. ID	EA	11
C	31	3	PAOZZ	5305-269-2803	MS90726-60	96906	SCREW, CAP, HEXAGON HEAD: HANDRAIL MTG, 3/8-24 THD SIZE, 1 IN. LG	EA	3
C	31	4	XBOZZ		3044236-2	92392	HANDRAIL	EA	1
C	31	5	PAOZZ	5310-012-0377	MS35690-605	96906	NUT, PLAIN, HEXAGON: LADDER MTG, 3/8-16 THD SIZE	EA	4
C	31	6	PAOZZ	5305-269-3211	MS90725-60	96906	SCREW, CAP, HEXAGON HEAD: LADDER MTG, 3/8-16 THD SIZE, 1 IN. LG	EA	4
C	31	7	PAOZZ		MS90726-66	96906	SCREW, CAP, HEXAGON HEAD: 3/8-24 THD SIZE, 2 IN. LG	EA	2
C	31	8	PAOZZ	5310-209-0691	MS15795-15	96906	WASHER, FLAT: LADDER MTG, 3/8 IN. ID	EA	4
C	31	9	XBOZZ		3047952-1	92392	LADDER, ACCESS	EA	1
C	31	10	XBOZZ		3045234-6	92392	BRACKET, LADDER SUPPORT	EA	1
C	32	1	XBOZZ		3051702-3	92392	BOX, TOOL	EA	1

	(1) ILLUSTRATION (a) FIG NO.	(b) ITEM NO.	(2) SMR CODE	(3) FEDERAL STOCK NUMBER	(4) PART NUMBER	(5) FSCM	(6) DESCRIPTION USABLE ON CODE	(7) U/M	(8) QTY INC IN UNIT
C	32	2	PAOZZ	3805-454-8102	3043841-0	92392	LATCH, TOOL BOX	EA	1
C	32	3	PAOZZ		172378	00000	SCREW, SELF-TAPPING: TOOL BOX LATCH	EA	2
C	32	4	PAOZZ	5305-269-3209	MS90725-58	96906	SCREW, CAP, HEXAGON HEAD: TOOL BOX MTG, 3/8-16 THD SIZE, 3/4 IN. LG	EA	4
C	32	5	PAOZZ	5310-080-6004	MS15795-14	96906	WASHER, FLAT: TOOL BOX MTG, 3/8 IN. ID	EA	4
C	32	6	PAOZZ	5310-637-9541	MS35338-46	96906	WASHER, LOCK: TOOL BOX MTG, 3/8 IN. ID	EA	4
C	33	1	PA000	2540-190-9799	D827-61	76359	SEAT ASSEMBLY	EA	1
C	33	2	PAOZZ	2540-960-9403	C2106	76359	CUSHION, BACK	EA	1
C	33	3	XAOZZ		C2080-88	76359	SHELL ASSEMBLY, SEAT	EA	1
C	33	4	PAOZZ	5305-269-3208	MS90725-57	96906	SCREW, CAP, HEXAGON HEAD: SEAT CUSHION	EA	7
C	33	5	PAOZZ	5310-080-6004	MS27183-14	96906	WASHER, FLAT: SEAT CUSHION	EA	7
C	33	6	PAOZZ	5340-660-0667	E2860	76359	SPRING	EA	1
C	33	7	PAOZZ	2540-960-9404	C2032	76359	CUSHION, SEAT	EA	1
C	33	8	PAOZZ	5306-225-9089	MS90726-34	96906	BOLT, MACHINE: SEAT MTG, 5/16-24 THD SIZE, 1 IN. LG	EA	4
C	33	9	XBOZZ		3045983-8	92392	SUPPORT, LEFT	EA	2
C	33	10	PAOZZ	5310-010-3320	MS35338-7	96906	WASHER, LOCK: SEAT MTG, 5/16 IN. ID	EA	4
C	33	11	PAOZZ		MS35690-522	96906	NUT, PLAIN, HEXAGON: SEAT MTG, 5/16-24 THD SIZE	EA	4
C	33	12	PAOZZ	5305-269-2805	MS90726-62	96906	SCREW, CAP, HEXAGON HEAD: SUPPORT MTG, 3/8-24 THD SIZE, 1 1/4 IN. LG	EA	8
C	33	13	PAOZZ	5310-209-0691	MS15795-15	96906	WASHER, FLAT: SUPPORT MTG, 13/32 IN. ID, 1 IN. OD	EA	4
C	33	14	PAOZZ	5310-637-9541	MS35338-46	96906	WASHER, LOCK: SUPPORT MTG, 3/8 IN. ID	EA	8
C	33	15	PAOZZ	5310-543-5973	MS35691-625	96906	NUT, PLAIN, HEXAGON: SUPPORT MTG, 3/8-24 THD SIZE	EA	8
C	33	16	XAOZZ		3045983	92392	SUPPORT, SEAT, LEFT	EA	1
C	33	17	PAOZZ	5310-899-9151	MS51967-13	96906	NUT, PLAIN, HEXAGON: SUPPORT MTG	EA	4
C	33	18	PAOZZ	5310-010-3323	MS35338-10	96906	WASHER, LOCK: SUPPORT MTG	EA	4
C	33	19	XAOZZ		3045984	92392	SUPPORT, SEAT, RIGHT	EA	1
C	33	20	PAOZZ		MS15795-19	96906	WASHER, FLAT: SUPPORT MTG	EA	4
C	33	21	PAOZZ	5305-042-6417	MS90725-113	96906	SCREW, CAP, HEXAGON HEAD: SUPPORT MTG	EA	4
C	33	22	PAOZZ		3045984-6	92392	SUPPORT, RIGHT	EA	2
C	34	1	XBOZZ		3051067-1	92392	COWL, FRONT	EA	1
C	34	2	XBOZZ		3050403	92392	COVER, STEERING GEAR, FRONT	EA	1
C	34	3	PAOZZ	5305-008-2084	171123	24617	SCREW, CAP, SELF-TAPPING, HEXAGON HEAD: 3/8-16 THD SIZE X 3/4 IN. LG, STEERING GEAR COVER	EA	2
C	34	4	PAOZZ	5310-543-5973	MS35691-625	96906	NUT, PLAIN, HEXAGON: FRONT COWL MTG AND COVER MTG	EA	10
C	34	5	PAOZZ	5310-261-7340	MS35338-8	96906	WASHER, LOCK: FRONT COWL MTG AND COVER MTG	EA	10
C	34	6	PAOZZ	5310-087-7493	MS15795-14	96906	WASHER, FLAT: FRONT COWL MTG AND COVER MTG	EA	10
C	34	7	PAOZZ		MS90726-34	96906	SCREW, SELF-TAPPING, HEXAGON HEAD: FRONT COWL MTG, 3/8-16 THD SIZE X 3/4 IN. LG	EA	6
C	34	8	XBOZZ		3050402	92392	COVER, STEERING GEAR, REAR	EA	1
C	34	10	XBOZZ				COVER, ACCESS, CONTROL VALVE	EA	1
C	34	11	PAOZZ		920651-7	92392	SCREW, SELF-TAPPING, PANHEAD: ACCESS COVER MTG	EA	3
C	34	12	PAOZZ	5305-725-4105	MS90726-164	96906	SCREW, CAP, HEXAGON HEAD: PLATFORM MTG	EA	4
C	34	16	XBOZZ		3052323-7	92392	PLATE, COVER, MASTER CYLINDER: LEFT	EA	1
C	34	17	XBOZZ	5305-269-3209	MS90725-58	96906	SCREW, CAP, HEXAGON HEAD: COVER MTG	EA	4
C	34	18	XBOZZ	3805-140-3862	3024079-9	92392	COVER ASSEMBLY, MASTER CYLINDER FILL	EA	2

(1) ILLUSTRATION (a) FIG NO.	(b) ITEM NO.	(2) SMR CODE	(3) NATIONAL STOCK NUMBER	(4) PART NUMBER	(5) FSCM	(6) DESCRIPTION USABLE ON CODE	(7) U/M	(8) QTY INC IN UNIT
35	1	PAOZZ	9905-00-205-2795	MS35387-1	96906	REFLECTOR, RED LENS	EA	2
35	2	PAOZZ		172427	00000	SCREW, SELF-TAPPING: REFLECTOR MTG	EA	4
						GROUP 07 - RADIATOR, GUARDS, AND HOSES		
36	1	XBOZZ		3052485-4	92392	TUBE, RADIATOR INLET	EA	1
36	2	PCOZZ	4720-00-110-1944	3043082-1	92392	HOSE, INLET TUBE	EA	2
36	3	PAOZZ	4730-00-845-5449	36P	66295	CLAMP, HOSE: INLET AND OUTLET HOSE	EA	8
36	4	PAOFF	2930-00-459-7018	73059575	92392	RADIATOR	EA	1
36	5	PAOZZ	2930-00-358-5960	73007198	92392	CAP, RADIATOR	EA	1
36	6	PAOZZ		MS35298-116	96906	SCREW, CAP, HEXAGON HEAD: RADIATOR MTG, 1/2-20 THD SIZE, 2 1/4 IN. LG	EA	4
36	7	PAOZZ	5340-00-446-3269	J6642-7	76005	MOUNT, RUBBER: RADIATOR	EA	4
36	8	PAOZZ		3032335-6	92392	WASHER, FLAT: RADIATOR MTG, 1/2 IN. ID	EA	4
36	9	PAOZZ	5310-00-209-0693	MS15795-19	96906	WASHER, LOCK: RADIATOR MTG, 1/2 IN. ID	EA	4
36	10	PAOZZ		MS21044N8	96906	NUT, SELF-LOCKING, HEXAGON: RADIATOR MTG, 1/2-20 THD SIZE	EA	4
36	11	PAOZZ	4820-00-112-0072	925486-3	92392	COCK, DRAIN: RADIATOR	EA	1
36	12	XBOFF		3042641-5	92392	GRILLE, METAL, FAN GUARD	EA	1
36	13	PCOZZ	4720-00-110-1946	3052487-0	92392	HOSE, OUTLET TUBE	EA	1
36	14	PAOZZ	5305-00-269-3214	MS90725-64	96906	SCREW, CAP, HEXAGON HEAD: GUARD MTG, 3/18-16 THD SIZE, 1 1/2 IN. LG	EA	4
36	15	PAOZZ	5310-00-209-0691	MS15795-15	96906	WASHER, FLAT: GUARD MTG, 3/8 IN. ID, 13/32 IN. THK, 1 IN. OD	EA	4
36	16	PAOZZ		29N1516	72962	NUT, FLANGE: GUARD MTG, 3/8-16 THD SIZE	EA	4
						GROUP 09 - AIR CLEANER AND TURBOCHARGER		
38	1	PADZZ	2940-00-112-7804	RBX00-2226	18265	INDICATOR ASSEMBLY: AIR CLEANER	EA	1
38	2	PAOZZ		121902	00000	NUT, PLAIN, HEXAGON: FLANGE MTG, 1/4 IN. ID, 28 THD SIZE	EA	2
38	3	PAOZZ	5310-00-010-3319	904204-5	92392	WASHER, LOCK: FLANGE MTG, 1/4 IN. ID	EA	2
38	4	PAOZZ	3930-00-069-3519	P10-5168	18265	FLANGE MOUNTING	EA	1
38	5	XBOZZ		3051778-3	92392	BRACKET: INDICATOR MTG	EA	1
38	6	PAOZZ	5305-00-068-0502	MS90726-6	96906	SCREW, CAP, HEXAGON HEAD: FLANGE MTG, 1/4-28 THD SIZE, 3/4 IN. LG	EA	2
38	7	XBOZZ		4DTXS	45681	ELBOW, PIPE TO TUBE: TUBE TO INDICATOR	EA	1
38	8	PAOZZ	4720-00-110-3662	3050352-8	92392	HOSE ASSEMBLY: CLEANER TO INDICATOR	EA	1
38	9	PAOZZ	2910-00-133-9878	621979-4	92392	CAP, AIR CLEANER	EA	1
38	10	PAOZZ	2940-00-115-0488	3045843-4	92392	TUBE, AIR INLET TO CLEANER	EA	1
38	11	PAOZZ	4730-00-115-0227	1822	17284	CLAMP	EA	1
38	12	PAOZZ	5310-00-543-5973	MS35691-625	96906	NUT, PLAIN, HEXAGON: LOOP CLAMP, 3/18-16 THD SIZE	EA	1
38	13	XBOZZ		3036228-9	92392	CLAMP, LOOP: AIR CLEANER TO INDICATOR	EA	1
38	14	PADZZ	5305-00-576-6987	MS35298-64	96906	SCREW, CAP, HEXAGON HEAD: LOOP CLAMP	EA	1
38	15	PAOZZ	4730-00-287-1649	MS39230-1	96906	ELBOW, PIPE: HOSE TO CLEANER STREET, 90 DEG, 1/8 IN. NPT	EA	1
38	16	PADZZ	4720-00-489-5871	3038683-3	92392	ELBOW, RUBBER	EA	1
38	17	PAOZZ	4730-00-838-2378	MS21920-28R	96906	CLAMP, ADJUSTING	EA	2
38	18	XBOZZ		3050333-8	92392	TUBE, AIR OUTLET TO TURBOCHARGER	EA	1
38	19	PAOZZ	4730-00-985-0758	MS21920-39	96906	CLAMP, HOSE: AIR CLEANER HOSE	EA	2
38	20	PAOZZ	4820-00-115-0228	3040648-2	92392	ELBOW, RUBBER	EA	1
38	21	PADZZ	5305-00-269-2803	MS90726-60	96906	SCREW, CAP, HEXAGON HEAD: BRACKET MTG	EA	4
38	22	PAOZZ	5310-00-080-6004	MS15795-14	96906	WASHER, FLAT: BRACKET MTG, 3/8 IN. ID	EA	4
38	23	PAOZZ	5310-00-637-9541	904206-0	89926	WASHER, LOCK: BRACKET MTG, 3/8 IN. ID	EA	5

(1) ILLUSTRATION (a) FIG NO.	(b) ITEM NO.	(2) SMR CODE	(3) FEDERAL STOCK NUMBER	(4) PART NUMBER	(5) FSCM	(6) DESCRIPTION USABLE ON CODE	(7) U/M	(8) QT INC IN UNI
38	24	PAOZZ	5310-00-543-5973	MS35691-625	96906	NUT, PLAIN, HEXAGON: BRACKET MTG, 3/8 IN. ID, 24 THD SIZE	EA	4
38	25	XBOZZ		P3231	17284	BRACKET ASSEMBLY, AIR CLEANER	EA	2
38	26	PAOZZ	5310-00-010-5616	105616	00000	NUT, PLAIN, SQUARE: BRACKET	EA	2
38	27	PAOZZ		133111	00000	SCREW, MACHINE: BRACKET	EA	2
38	28	PAOZZ	2940-00-133-9876	FWG12-0061	18265	AIR CLEANER ASSEMBLY	EA	1
39	1	XBOZZ		P10-3671	18265	CUP, OIL	EA	1
39	2	PAOZZ	5340-00-933-0698	P10-0808	18265	CLAMP ASSEMBLY, AIR CLEANER	EA	1
39	3	XBOZZ	2940-00-901-1286	P10-1238	18265	BAFFLE ASSEMBLY	EA	1
39	4	PAOZZ	5305-00-961-6507	P1B464	18265	SCREW, ASSEMBLED WASHER: ELEMENT	EA	1
39	5	PAOZZ		P11-2031	18265	ELEMENT	EA	1
39	6	PAOZZ	5330-00-964-6318	P17804	18265	PACKING, PREFORMED: ELEMENT	EA	1
39	7	XAOZZ		P11-2077	18265	BODY, AIR CLEANER	EA	1
39	8	PAOZZ	2940-00-832-8729	P10-3198	18265	VALVE	EA	1
40	1	PAOZZ	2815-00-133-9988	4025927-7	92392	TUBE, TURBO TO MANIFOLD	EA	1
40	2	PAOZZ	4730-00-909-8627	MS35842-13	96906	CLAMP, HOSE: TUBE TO TURBOCHARGER	EA	2
40	3	PCOZZ	4720-00-110-3663	4026224-8	92392	HOSE, CONNECTING OUTLET TUBE	EA	1
40	4	PAOZZ	2990-00-115-0492	236705-0	92392	ELBOW: TURBOCHARGER EXHAUST	EA	1
40	5	PAOZZ	4730-00-168-1840	3000	27964	CLAMP ASSEMBLY, EXHAUST TUBE	EA	1
40	6	PAOZZ	4710-00-401-9416	3052867-3	92392	TUBE, EXHAUST	EA	1
40	7	PAOZZ	5310-00-637-9541	904206-0	92392	WASHER, LOCK: ELBOW MTG, 3/8 IN. ID	EA	4
40	8	PAOZZ	5305-00-269-3211	MS90725-60	96906	SCREW, CAP, HEXAGON HEAD: ELBOW MTG	EA	4
40	9	PAOZZ		921372-9	92392	ADAPTER, PIPE TO TUBE: OIL INLET TUBE, MALE, FLARED, 3/8 IN. TUBE, 1/8 IN. NPT	EA	1
40	10	PAOZZ	4730-00-568-4131	69FL3-8X1-8	30327	ELBOW, PIPE TO TUBE: OIL INLET TUBE, 90 DEG, 3/8 IN. TUBE, 1/8 IN. NPT	EA	1
40	11	PAOZZ	4710-00-930-9371	4026566-2	92392	TUBE ASSEMBLY, OIL INLET	EA	1
40	12	XAOZZ		4338301-7	92392	SLEEVE	EA	2
40	13	XAOZZ	4730-00-848-7131	917810-4	92392	NUT, TUBE COUPLING	EA	2
40	14	PAOZZ	4730-00-415-3172	443998	00000	ADAPTER, PIPE: OIL INLET TUBE	EA	2
40	15	PAOZZ	5310-00-115-6233	4000536	76667	NUT, SELF-LOCKING, HEXAGON, TURBOCHARGER MTG	EA	4
40	16	PAOZZ		MS27183-14	96906	WASHER, FLAT: TURBOCHARGER MTG, 13/32 IN. ID	EA	4
C 40	17	PAOZZ	5307-00-115-1552	74513701	92392	STUD, PLAIN: TURBOCHARGER MTG	EA	4
40	18	PAOZZ	2815-00-920-6840	4025781-8	92392	GASKET: TURBOCHARGER TO EXHAUST MANIFOLD	EA	1
40	19	PAOZZ	4730-00-063-7920	A14	05657	CLAMP, HOSE	EA	2
40	20	PAOZZ	4720-00-110-3664	71703	80254	HOSE, CONNECTING OIL DRAIN	EA	1
40	21	PAOZZ	4730-00-172-8764	4255612-6	92392	ADAPTER, PIPE TO HOSE: DRAIN TUBE	EA	1
40	22	PAOZZ	2815-00-930-9320	4026191-9	92392	TUBE ASSEMBLY, OIL DRAIN	EA	1
40	23	XAOZZ		1290-10S	01276	NUT, TUBE COUPLING	EA	1
40	24	XAOZZ		919612-2	92392	SLEEVE, COMPRESSION	EA	1
40	25	PAOZZ		2023-8-10S	01276	ADAPTER, PIPE TO TUBE	EA	1
40	26	PAOZZ	5330-00-110-5692	4025376-7	92392	GASKET: TUBE TO MANIFOLD	EA	1
40	27	PAOZZ	4730-00-042-8988	444619	24617	PLUG, PIPE: TUBE	EA	1
40	28	PAOZZ	5305-00-558-4901	MS35301-62	96906	SCREW, CAP, HEXAGON HEAD: INLET TUBE MTG	EA	4
40	29	PAOZZ	5310-00-261-7340	904206-0	92392	WASHER, LOCK: INLET TUBE MTG	EA	4

	(1) ILLUSTRATION (a) FIG NO.	(b) ITEM NO.	(2) SMR CODE	(3) FEDERAL STOCK NUMBER	(4) PART NUMBER	(5) FSCM	(6) DESCRIPTION USABLE ON CODE	(7) U/M	(8) QTY INC IN UNIT
C	40	30	PAOZZ	5310-080-6004	MS27183-14	96906	WASHER, FLAT: INLET TUBE MTG, 13/32 IN. ID	EA	4
C	40	31	PAOZZ	5340-276-5853	103896	09367	PLUG, EXPANSION: INLET TUBE	EA	1
C	40	32	PAOHH	2950-018-2191	4026911-0	92392	TURBOCHARGER ASSEMBLY	EA	1
							GROUP 10 - OIL FILTER AND OIL COOLER		
C	42	1	PAOZZ	2940-580-6513	144513	88142	FILTER ASSEMBLY, LUBE OIL	EA	2
C	42	2	XBOZZ		150035	88142	COVER ASSEMBLY	EA	2
C	42	3	PCOZZ	5330-718-7385	104503	88142	GASKET: COVER	EA	2
C	42	4	PAOZZ	2940-580-6283	143407	87405	ELEMENT	EA	2
C	42	5	PAOZZ	2940-401-9429	234024	87405	BODY ASSEMBLY	EA	2
C	42	6	PAOZZ	2940-391-3330	109024	88142	SCREW: BRACKET MTG	EA	4
C	42	7	PAOZZ	2940-391-3330	102153	87405	BRACKET	EA	4
C	42	8	PAOZZ		151413	88142	WASHER, LOCK: BRACKET MTG	EA	4
C	42	9	PAOZZ		153684	88142	NUT, PLAIN, HEXAGON	EA	4
	42		XBOZZ		154100	88142	PLATE, IDENTIFICATION	EA	2
C	42	10	PAOZZ	4730-231-3014	MS20822-10	96906	ELBOW, PIPE TO TUBE: HOSE TO FILTER	EA	4
C	42	11	PAOZZ		MS35690-502	96906	NUT, PLAIN, HEXAGON: FILTER MTG	EA	8
C	42	12	PAOZZ	5310-010-3320	MS35338-7	96906	WASHER, LOCK: FILTER MTG	EA	8
C	42	13	PAOZZ	5310-081-4219	MS27183-12	96906	WASHER, FLAT: FILTER MTG	EA	8
C	42	14	PAOZZ	5305-225-9081	MS90725-36	96906	SCREW, CAP, HEXAGON HEAD: FILTER MTG	EA	8
C	42	15	MOOZZ		3052037-3	92392	HOSE ASSEMBLY: FILTER TO BLOCK MANUFACTURE FROM:	EA	2
C	42		PAOZZ	4730-433-9087			FITTING, 2 EA REQUIRED	EA	
	42		PCOZZ	4720-113-5484			HOSE, 33 1/2 IN. REQUIRED EA HOSE	EA	
C	42	16	PAOZZ	5310-261-7340	904206-0	92392	WASHER, LOCK: PLATE MTG	EA	2
C	42	17	PAOZZ	5305-269-3210	MS90725-59	96906	SCREW, CAP, HEXAGON HEAD: PLATE MTG	EA	2
C	42	18	XBOZZ		4026382-4	92392	PLATE, COVER: OIL FILTER	EA	2
C	42	20	XBOZZ		3052027-4	92392	BRACKET: CLAMP	EA	1
C	42	21	PAOZZ		3052035-7	92392	CLAMP, HOSE	EA	1
C	42	22	PAOZZ	4730-231-3015	MS20822-10-12	96906	ELBOW, PIPE: HOSE TO FILTER	EA	4
C	42	23	MOOZZ		3052036-5	92392	HOSE ASSEMBLY: FILTER TO BLOCK MANUFACTURE FROM:	EA	2
C	42		PAOZZ	4730-433-9087			FITTING, 2 EA REQUIRED	EA	
C	42		PCOZZ	4720-113-5484			HOSE, 31 1/2 IN. REQUIRED EA HOSE	EA	
C	42	24	PAOZZ		923683-7	92392	SCREW, SELF-TAPPING, HEXAGON WASHER HEAD: BRACKET MTG	EA	1
							GROUP 11 - FUEL SYSTEM		
C	44	1	PAOZZ	4730-289-2368	925015-0	79470	ELBOW, STREET: PRIMER HOSE, 90 DEG, 1/4 IN. MALE, 1/8 IN. FEMALE	EA	1
C	44	2	PCOZZ	4720-110-1942	3051032-5	92392	HOSE ASSEMBLY, TANK PRIMER	EA	1
C	44	3	PAOZZ	4730-254-6226	49X545X4	79470	ELBOW, PIPE TO TUBE: PRIMER HOSE	EA	2
C	44	4	PAOZZ	5305-912-4819	MS35276-276	96906	SCREW, MACHINE: PRIMER MTG, NO. 10-32 THD SIZE, 1 IN. LG	EA	2
C	44	5	PAOZZ	4320-335-9260	12385	84760	PUMP ASSEMBLY, PRIMER	EA	1
C	44	6	PAOZZ	5310-010-6497	MS35338-5	96906	WASHER, LOCK: PRIMER MTG, 3/16 IN. ID	EA	2

	(1) ILLUSTRATION (a) FIG NO.	(b) ITEM NO.	(2) SMR CODE	(3) FEDERAL STOCK NUMBER	(4) PART NUMBER	(5) FSCM	(6) DESCRIPTION USABLE ON CODE	(7) U/M	(8) QT' INC IN UNI
	44	7	PAOZZ		MS35650-102	96906	NUT, PLAIN, HEXAGON: PRIMER MTG, 10-32 THD SIZE	EA	2
	44	8	XBOZZ		3048541-1	92392	BRACKET, PRIMER PUMP	EA	1
	44	9	PAOZZ	4730-00-640-6330	925010-1	92392	ADAPTER: PRIMER TO FILTER, 1/8 IN., 1/4 IN. MALE	EA	1
C	44	10	PAOOO	2910-00-492-7306	7767247	19207	FILTER ASSEMBLY	EA	1
	44	11	XAOZZ		3042830-1	92392	HEAD, FILTER	EA	1
C	44	12	PAOZZ	2910-00-492-7306	HY10921	21102	STRAINER, FUEL	EA	1
	44	13	PCOZZ	5330-00-550-7312	45012-3	30327	GASKET, HEAD	EA	1
	44	14	PAOZZ	2910-00-269-7126	32276	30327	BOWL, FUEL STRAINER	EA	1
	44	15	XBOZZ	2940-00-371-6579	32279	30327	BAIL ASSEMBLY, BOWL	EA	1
	44	16	XAOZZ		62560	30327	NUT, BAIL	EA	1
	44	17	PAOZZ	4730-00-937-0808	9025017-6	92392	ELBOW, PIPE TO TUBE: FILTER TO HOSE, 90 DEG, FLARE TYPE, 3/8 IN. TUBE, 1/4 IN. NPT, MALE	EA	2
	44	18	PCOZZ		3052028-2	92392	HOSE ASSEMBLY, FUEL	EA	1
	44	19	PAOZZ	4710-00-115-0489	3051039-0	92392	TUBE ASSEMBLY, FUEL FILTER	EA	1
	44	20	PAOZZ	5310-00-543-5973	MS35691-625	96906	NUT, PLAIN, HEXAGON: PRIMER BRACKET MTG, 3/8-24 THD SIZE	EA	2
	44	21	PAOZZ	5310-00-261-7340	904206-0	92392	WASHER, LOCK: PRIMER BRACKET MTG, 3/8 IN. ID	EA	2
	44	22	PAOZZ		MS35298-64	96906	SCREW, CAP, HEXAGON HEAD: PRIMER BRACKET MTG, 3/8-24 THD SIZE	EA	2
	45	1	PAOZZ	5310-00-809-4085	MS27183-16	96906	WASHER, FLAT: BRACKET MTG, 7/16 IN. ID	EA	2
	45	2	PAOZZ	5310-00-010-3322	904207-8	92392	WASHER, LOCK: BRACKET MTG, 7/16 IN. ID	EA	2
	45	3	PAOZZ	5305-00-069-5572	MS90725-84	96906	SCREW, CAP, HEXAGON HEAD: BRACKET MTG. 7/16-14 THD SIZE, 7/8 IN. LG	EA	2
	45	4	PAOZZ	4730-00-111-2506	919005-9	92392	ELBOW, PIPE TO TUBE: TUBE TO FILTER	EA	1
	45	5	PAOZZ	4710-00-115-0491	4027273-4	92392	TUBE ASSEMBLY, FUEL FITER TO INJECTION PUMP	EA	1
	45	6	PAOZZ	5305-00-269-3208	MS90725-57	96906	SCREW, CAP, HEXAGON HEAD: FILTER MTG, 3/8-16 THD SIZE, 5/8 IN. LG	EA	4
	45	7	PAOZZ	5310-00-261-7340	904206-0	92392	WASHER, LOCK: FILTER MTG, 3/8 IN. ID	EA	4
	45	8	XBOZZ		X230209	88142	BRACKET, ANGLE FUEL FILTER MOUNTING	EA	1
	45	9	PAOZZ	4730-00-111-2507	920280-5	92392	ELBOW, PIPE TO TUBE: TUBE TO PUMP	EA	1
	45	10	PAOOO	2910-00-133-9884	X230208	88142	FILTER ASSEMBLY, FUEL	EA	1
	45	11	PAOZZ	4730-00-044-4614	444614	00000	PLUG, DRAIN	EA	1
	45	12	PAOZZ	2910-00-820-2279	149060	92392	BODY, FILTER	EA	1
	45	13	PAOZZ	2910-00-287-1930	121709	88142	ELEMENT, FILTER	EA	1
R	45	14	XAOZZ	5365-00-784-0042	103629	88142	RING, RETAINING: ELEMENT	EA	1
	45	15	PCOZZ	5330-00-663-4773	101489	73370	GASKET, HEAD	EA	1
	45	16	XAOZZ		101488	88142	HEAD, FILTER	EA	1
	45	17	PCOZZ		101487	88142	GASKET, SCREW	EA	1
	45	18	PAOZZ	2910-00-861-6890	104071	88142	SCREW, VENT	EA	1
	45	19	PAOZZ	4730-00-537-1192	104018	73340	PLUG, VENT	EA	1
R	46	1	XBOZZ	2910-00-166-4303	LP3864R7Z	61112	CONTROL CABLE ASSEMBLY	EA	1
	46		XAOZZ		LP2974R	61112	CABLE, CONTROL	EA	1
	46		XAOZZ		LP2814	61112	STOP ASSEMBLY	EA	1
	46	2	XBOZZ		3016496-6	92392	CLAMP, LOOP: CONTROL CABLE	EA	1
	46	3	XBOZZ	4730-00-814-4132	269P	30327	ELBOW, PIPE TO TUBE: PRIMER TO LINE	EA	1
	46	4	XBOZZ		3052091-0	92392	TUBE ASSEMBLY, VALVE TO AIR INTAKE	EA	1
	46	5	PAOZZ	2910-00-133-9883	LP2773-15	61112	FLUID INJECTOR ASSEMBLY, COLD WEATHER START	EA	1

(1) (b) ITEM NO.	(2) SMR CODE	(3) NATIONAL STOCK NUMBER	(4) PART NUMBER	(5) FSCM	(6) DESCRIPTION USABLE ON CODE	(7) U/M	(8) QTY INC IN UNIT
6	PAOZZ	4820-00-115-0230	LP3235-9	61112	VALVE, W/BRACKET ASSEMBLY	EA	1
7	PAOZZ	5305-00-225-3839	MS90725-8	96906	SCREW, CAP, HEXAGON HEAD: VALVE AND CLAMP MTG	EA	4
8	PAOZZ	5310-00-809-3078	MS27183-11	96906	WASHER, FLAT: VALVE AND CLAMP MTG	EA	4
9	PAOZZ	5310-00-010-3319	904204-5	92392	WASHER, LOCK: VALVE AND BRACKET MTG	EA	4
10	PAOZZ		109084	00000	NUT, PLAIN, HEXAGON: VALVE AND CLAMP MTG	EA	4
11	PAOZZ		LP1058	61112	CLAMP, TANK, COLD WEATHER START	EA	1
12	PAOZZ	2910-00-646-9727	LP535-1	61112	CONTAINER, FLUID, COLD WEATHER START	EA	1
1	PAOZZ	2815-00-133-9986	4025219-9	92392	TUBE ASSEMBLY, DRIP	EA	1
2	PAOZZ	5340-00-110-5680	917806-2	92392	SLEEVE	EA	7
3	PAOZZ	4730-00-985-6642	917809-6	92392	NUT, TUBE COUPLING	EA	7
4	PAOZZ	2910-00-352-3024	4501149-1	92392	SLEEVE: INJECTION TUBE, 1/4 IN. TUBE	EA	6
5	PAOZZ	4730-00-595-4924	4505509-6	92392	NUT, TUBE COUPLING: INJECTION TUBES	EA	6
6	PAOZZ	4710-00-168-1854	4026538-1	92392	TUBE ASSEMBLY, CYLINDER: NO. 6	EA	1
7	PAOZZ	4710-00-168-1814	4026537-3	92392	TUBE ASSEMBLY, CYLINDER: NO. 5	EA	1
8	PAOZZ	4710-00-168-1815	4026536-5	92392	TUBE ASSEMBLY, CYLINDER: NO. 4	EA	1
9	PAOZZ	4710-00-168-1852	4026535-7	92392	TUBE ASSEMBLY, CYLINDER: NO. 3	EA	1
10	PAOZZ	4710-00-168-1825	4026534-0	92392	TUBE ASSEMBLY, CYLINDER: NO. 2	EA	1
11	PAOZZ	4730-00-111-2505	921534-4	92392	CONNECTOR: DRIP TUBE TO DRAIN TUBE	EA	1
12	PAOZZ	4710-00-143-8989	402616-6	92392	TUBE ASSEMBLY, FUEL RETURN	EA	1
13	PAOZZ	4710-00-168-1823	4026533-2	92392	TUBE ASSEMBLY, CYLINDER NO. 1	EA	1
14	XBOZZ		4026479-8	92392	CLAMP: INJECTION TUBE	EA	1
15	PAOZZ	5340-00-115-6126	4025218-1	92392	SPACER: INJECTION TUBE	EA	2
16	XBOZZ	2910-00-408-9391	4025217-3	92392	CLAMP: INJECTION TUBE	EA	1
17	PAOZZ	5310-00-010-3319	904204-5	92392	WASHER, LOCK: TUBE CLAMP, 1/4 IN. SCREW SIZE	EA	2
18	PAOZZ	5310-00-723-4458	MS35690-404	96906	NUT, PLAIN, HEXAGON: TUBE CLAMP, 1/4-20 THD SIZE	EA	2
19	PAOZZ	5305-00-071-2242	MS90725-9	96906	SCREW, CAP, HEXAGON HEAD: TUBE CLAMP, 1/4-20 THD SIZE, 1 1/4 IN. LG	EA	2
20	XBOZZ		4507415-0	92392	CLAMP: INJECTION TUBE	EA	2
21	PAOZZ	5340-00-891-6136	4507-359-0	92392	SPACER: INJECTION TUBE	EA	2
22	PAOZZ	5310-00-010-3320	MS35338-7	96906	WASHER, LOCK: TUBE CLAMP, 5/16 IN. SCREW SIZE	EA	2
23	PAOZZ	5310-00-543-2629	MS35690-502	96906	NUT, PLAIN, HEXAGON: TUBE CLAMP, 5/16-18 TH SIZE	EA	2
24	PAOZZ	5306-00-225-9081	MS90725-36	96906	SCREW, CAP, HEXAGON HEAD: TUBE CLAMP, 5/16-18 THD SIZE, 1 1/4 IN. LG.	EA	2
1	PAOOO	2910-00-152-9874	4027883-0	92392	NOZZLE, FUEL INJECTOR	EA	6
13	PAOZZ	2910-00-930-5797	4025385-8	92392	CAP, PROTECTIVE	EA	12
14	PAOZZ	5310-00-010-3320	MS35338-7	96906	WASHER, LOCK: INJECTOR MTG, 5/16 IN. ID	EA	12
15	PAOZZ	5306-00-018-0084	180084	00000	BOLT, MACHINE, INJECTOR MTG, 5/16-18 THD SIZE, 1 5/8 IN. LG	EA	12
	PAOZZ	4710-00-277-7581			TUBE, COPPER, 1/8 IN. COIL, 25 FT. AS REQUIRED		
1	PAOZZ	4730-00-430-4390	69FL1-4X1-8	30327	ELBOW, PIPE TO TUBE: LINE TO TEE	EA	1
2	PAOZZ	4730-00-274-9258	922804-0	92392	TEE, PIPE: LINE TO PUMP, 5/16 X 1/8 NPT, BRASS	EA	1
					GROUP 12 - FAN, WATER PUMP, AND THERMOSTAT		
1	PAOZZ	2930-00-133-9893	3051938-3	92392	FAN	EA	1
2	PAOZZ	3030-00-920-6712	4025619-0	92392	BELT, MATCHED SET	EA	1
3	PAOZZ	2930-00-133-9892	4025058-1	92392	PULLEY, PUMP	EA	1

	(1) ILLUSTRATION (a) FIG NO.	(b) ITEM NO.	(2) SMR CODE	(3) FEDERAL STOCK NUMBER	(4) PART NUMBER	(5) FSCM	(6) DESCRIPTION USABLE ON CODE	(7) U/M
	53	4	XBOZZ		4025641-4	92392	SPACER: FAN	EA
	53	5	PAOZZ	5310-00-261-7340	904206-0	92392	WASHER, LOCK: FAN MTG, 3/8 IN. ID	EA
	53	6	PAOZZ		MS35304-74	96906	SCREW, CAP, HEXAGON HEAD: FAN MTG, 3/8-24 THD SIZE, 4 IN. LG	EA
	54	1	PAOZZ		MS35297-91	96906	SCREW, CAP, HEXAGON HEAD: PUMP MTG, 3/8-16 THD SIZE, 2 IN. LG	EA
	54	2	PAOZZ	5310-00-110-2761	4025139-9	92392	WASHER, TAB: PUMP MTG	EA
	54	3	KFOZZ	5310-00-110-5689	4254816-4	92392	PACKING, PREFORMED: WATER PUMP (PART OF KIT, NSN 2815-00-135-8922)	EA
C	54	4	PAOZZ	5330-00-110-8744	74025106	92392	GASKET: INLET PIPE (PART OF KIT, NSN 2815-00-135-8922)	EA
	54	5	XBOZZ		4027247-8	92392	PIPE, WATER INLET	EA
	54	6	PAOZZ	4730-00-289-5176	444703	00000	PLUG, PIPE: INLET PIPE	EA
	54	7	PAOZZ	5305-00-269-3214	MS90725	96906	SCREW, CAP, HEXAGON HEAD: PIPE MTG, 3/8-16 THD SIZE, 1 1/2 IN. LG	EA
	54	8	PAOZZ	5310-00-637-9541	904206-0	92392	WASHER, LOCK: INLET PIPE, 3/8 IN. ID	EA
	54	9	PAOZZ	5310-00-080-6004	MS27183-14	96906	WASHER, FLAT: PIPE MTG, 3/8 IN. ID	EA
	54	10	PAOZZ	5310-00-637-9541	904206-0	92392	WASHER, LOCK: PUMP MTG, 3/8 IN. ID	EA
C	54	11	PAOZZ	5305-00-269-3212	MS90725-61	96906	SCREW, CAP, HEXAGON HEAD: PUMP MTG, 3/8-16 THD SIZE, 1 1/8 IN. LG	EA
	54	12	PAOZZ		MS35295-71	96906	SCREW, CAP, HEXAGON HEAD: PUMP MTG, 3/8-16 THD SIZE, 3 1/4 IN. LG	EA
	54	13	PAOFF	2930-00-111-5193	4026886-4	92392	PUMP ASSEMBLY, WATER	EA
	56	1	XBOFF		4027021-7	92392	HOUSING, THERMOSTAT, UPPER	EA
	56	2	PAOZZ	5310-00-010-3322	904207-8	92392	WASHER, LOCK: UPPER HOUSING 7/16 IN. ID	EA
	56	3	PAOZZ	5305-00-069-5580	MS90725-96	96906	SCREW, CAP, HEXAGON HEAD: UPPER HOUSING MTG, 7/16-14 THD SIZE, 3 1/4 IN. LG	EA
	56	4	PAOZZ	4730-00-289-5176	444703	00000	PLUG, PIPE: THERMOSTAT HOUSING	EA
	56	5	PAOZZ	4730-00-111-2509	MS35842-3	96906	CLAMP, HOSE: BY-PASS HOSE	EA
	56	6	PCOZZ	4720-00-110-1945	4027027-4	92392	HOSE: BY-PASS	EA
	56	7	PAOZZ		MS35297-86	96906	SCREW, CAP, HEXAGON HEAD: LOWER HOUSING MTG, 7/16-14 THD SIZE, 1 1/8 IN. LG	EA
	56	8	XBOZZ		4027023-3	92392	HOUSING, THERMOSTAT, LOWER	EA
C	56	9	PAOZZ	5330-00-930-5793	74025101	92392	GASKET: THERMOSTAT HOUSING	EA
	56	10	XBOZZ		4257247-8	92392	CONNECTOR: ELBOW OUTLET HOSE	EA
	56	11	PCOZZ	2930-00-112-0230	3043646-3	92392	HOSE, OUTLET	EA
	56	12	PAOZZ	4730-00-845-5449	36P	66295	CLAMP, HOSE: OUTLET HOSE	EA
	56	13	PAOZZ	4730-00-984-7175	2081-12-8S	01267	BUSHING, PIPE: OUTLET TO ELBOW, 3/4 IN. X 1/2 IN.	EA
	56	14	PAOZZ		445751	24617	PLUG, PIPE: THERMOSTAT HOUSING	EA
C	56	15	PAOZZ	5330-00-408-6005	74027024	92392	GASKET: BETWEEN UPPER AND LOWER HOUSING	EA
	56	16	PAOZZ	6620-00-954-8686	MS35770-9	96906	THERMOSTAT	EA
	56	17	PCOZZ	5330-00-848-9943	4317554-6	92392	SEAL, THERMOSTAT	EA
							GROUP 13 - ALTERNATOR AND STARTING MOTOR	
	57	1	PAOZZ		MS16203-15	96906	NUT, PLAIN, HEXAGON: BRACE TO ALTERNATOR	EA
	57	2	PAOZZ	5310-00-010-3320	MS35338-7	96906	WASHER, LOCK: BRACE TO ALTERNATOR	EA
	57	3	PAOZZ	5310-00-081-4219	MS27183-12	96906	WASHER, FLAT: BRACE TO ALTERNATOR	EA
	57	4	XBOZZ	2920-00-476-5454	4027327-8	92392	BRACE ADJUSTING	EA
	57	5	PAOZZ	5310-00-637-9541	904205-2	92392	WASHER, LOCK: ADJUSTING BRACE	EA
	57	6	PAOZZ	5306-00-226-8500	MS90725-35	96906	SCREW, CAP, HEXAGON HEAD: ADJUSTING BRACE	EA

	(1) ILLUSTRATION (a) FIG NO.	(b) ITEM NO.	(2) SMR CODE	(3) FEDERAL STOCK NUMBER	(4) PART NUMBER	(5) FSCM	(6) DESCRIPTION USABLE ON CODE	(7) U/M
	57	7	PAOZZ	2920-00-133-9885	4026031-7	92392	BRACKET, ALTERNATOR HOUSING	EA
	57	8	PAOZZ	5310-00-637-9541	904206-0	92392	WASHER, LOCK: BRACKET MTG	EA
	57	9	PAOZZ	5303-00-269-4511	MS90725-63	96906	SCREW, CAP, HEXAGON HEAD: BRACKET MTG	EA
	57	10	PAOZZ		MS35297-73	96906	SCREW, CAP, HEXAGON HEAD: BRACKET MTG	EA
	57	11	PAOZZ	5305-00-018-0127	919226-1	92392	SCREW, CAP, HEXAGON HEAD: ALTERNATOR MTG	EA
	57	12	PAOHH	2920-00-113-0693	MH24N901G	94990	GENERATOR, ALTERNATOR	EA
	57	13	XAOZZ		43A44663B01	94990	SPACER, FAN	EA
	57	14	PAOZZ	2920-00-133-9889	49C44649B03	94990	FAN	EA
	57	15	PAOZZ	3020-00-115-8895	4027238-9	94990	PULLEY, ALTERNATOR	EA
	57	16	XBOZZ		4A41436A03	94990	WASHER, LOCK: PULLEY	EA
	57	17	PAOZZ	5310-00-115-6224	2A41435A03	94990	NUT, PULLEY	EA
	58	1	XBOZZ	2920-00-133-9890	15D44434B05	94990	HOUSING, FRONT	EA
	59	1	PAOZZ	2920-00-111-5194	70C44832B01	94990	REGULATOR, VOLTAGE	EA
	59	2	PAOZZ	5305-00-068-0502	MS90725-6	96906	SCREW, CAP, HEXAGON HEAD: REGULATOR MTG	EA
	59	3	PAOZZ	5310-00-010-3319	904204-5	92392	WASHER, LOCK: REGULATOR MTG	EA
	59	4	PAOZZ	5310-00-010-9084	109084	00000	NUT, PLAIN, HEXAGON: REGULATOR MTG	EA
	60	1	PAOZZ	2920-00-110-9695	3052160-3	92392	WIRE, CABLE: STARTER	EA
	60	2	XBOZZ	3805-00-482-8932	4025429-4	92392	ADAPTER, STARTER	EA
	60	3	PAOZZ	5310-00-820-6653	MS35338-60	96906	WASHER, LOCK: STARTER MTG	EA
	60	4	PAOZZ	5305-00-727-3804	MS90725-165	96906	SCREW, CAP, HEXAGON HEAD: STARTER MTG	EA
	60	5	PAOHH	2920-00-081-1646	11133868	16764	STARTER, ENGINE, ELECTRICAL	EA
							GROUP 14 - MANIFOLDS	
	63	1	PAOZZ	2815-00-133-9993	4025720-6	92392	MANIFOLD, EXHAUST, REAR	EA
C	63	2	PAOZZ		74027014	92392	GASKET: MANIFOLD, EXHAUST	EA
C	63	3	PAOZZ	2815-00-133-9990	74028795	92392	MANIFOLD, EXHAUST, CENTER	EA
	63	4	PAOZZ	2815-00-133-9991	4025719-8	92392	MANIFOLD, EXHAUST, FRONT	EA
	63	5	PAOZZ	4730-00-012-7951	127951	00000	PLUG, PIPE: MANIFOLD, 1/4 IN. NPT, BRASS	EA
	63	6	PAOZZ	5305-00-053-8993	MS90725-112	96906	SCREW, CAP, HEXAGON HEAD: MANIFOLD MTG, 1/2-13 THD SIZE, 1 3/8 IN. LG	EA
	63	7	PAOZZ		4025165-4	92392	WASHER, FLAT: MANIFOLD MTG, 1/2 IN. ID	EA
C	64	1	PAOZZ		74026579	92392	GASKET: MANIFOLD	EA
	64	2	PAOZZ	2990-00-133-9837	4025050-8	92392	MANIFOLD, INTAKE	EA
	64	3	PAOZZ	4730-00-044-4854	444854	00000	PLUG, PIPE: MANIFOLD	EA
C	64	4	PAOZZ	5305-00-269-3212	MS90725-61	96906	SCREW, CAP, HEXAGON HEAD: MANIFOLD MTG	EA
	64	5	PAOZZ	5310-00-261-7340	904206-0	92392	WASHER, LOCK: MANIFOLD MTG	EA
	64	6	PAOZZ	5310-00-080-6004	MS27183-14	96906	WASHER, FLAT: MANIFOLD MTG	EA
							GROUP 15 - OIL PAN AND OIL PUMP	
	65	7	PAOZZ	4730-00-406-6780	4027320-3	92392	PLUG, MAGNETIC: OIL DRAIN	EA

(1) ILLUSTRATION (a) FIG NO.	(b) ITEM NO.	(2) SMR CODE	(3) FEDERAL STOCK NUMBER	(4) PART NUMBER	(5) FSCM	(6) DESCRIPTION USABLE ON CODE	(7) U/M	
						GROUP 16 - FLYWHEEL AND HOUSING		
68	9	PAOZZ	4730-00-044-4619	444619	00000	PLUG, PIPE: FLYWHEEL HOUSING	EA	
						GROUP 17 - CYLINDER HEAD AND VALVES		
70	5	PAOZZ	4730-00-585-8582	4253977-5	92392	CLAMP, HOSE: BREATHER	EA	
70	6	PCOZZ	2940-00-367-0024	4650229-0	92392	HOSE, BREATHER	EA	
70	7	PAOZZ	2815-00-110-9601	4025993-9	92392	TUBE, BREATHER	EA	
70	8	XBOZZ		4025621-6	92392	CLAMP, LOOP: BREATHER HOSE	EA	
70	10	PAOZZ	5310-00-012-0377	MS35690-605	96906	NUT, PLAIN, HEXAGON: CLAMP MTG	EA	
70	11	PAOZZ	5310-00-261-7340	904206-0	92392	WASHER, LOCK: CLAMP MTG	EA	
70	12	PAOZZ	5310-00-186-7448	MS15795-14	96906	WASHER, FLAT: CLAMP MTG	EA	
70	13	XBOZZ		4025992-1	92392	BRACKET, CLAMP	EA	
70	14	XBOZZ		4025914-5	92392	CLAMP, LOOP: BREATHER TUBE	EA	
70	15	PAOZZ	5305-00-269-3209	MS90725-58	96906	SCREW, CAP, HEXAGON HEAD: CLAMP MTG	EA	
						GROUP 20 - CYLINDER BLOCK		
76	13	PAOZZ	4820-00-112-0071	14S	79470	COCK, DRAIN: ENGINE BLOCK	EA	2
76	15	PAOZZ	6680-00-113-0728	4026592-8	92392	GAGE, LIQUID QUANTITY, OIL	EA	1
76	16	PAOZZ	2815-00-110-9599	4026849-2	92392	ADAPTER, GAGE	EA	1
76	20	PAOZZ	2815-00-110-9600	4025717-2	92392	PIPE, OIL FILTER	EA	1
76	21	PAOZZ	2940-00-128-1172	4354449-3	92392	CAP, OIL FILTER	EA	1
C 76	22	PAOZZ	5305-00-269-3214	MS90725-64	96906	SCREW, CAP, HEXAGON HEAD	EA	2
						GROUP 21 - FUEL TANK		
77	3	PAOZZ	5310-00-378-0833	32254	23382	NUT, PLAIN, HEXAGON: HOSE CLAMP	EA	1
77	4	PAOZZ	5310-00-010-3322	904207-8	92392	WASHER, LOCK: HOSE CLAMP, 7/16 IN. ID	EA	1
77	5	PCOZZ	4720-00-110-3665	3052029-0	92392	HOSE ASSEMBLY: INJECTOR PUMP TO TANK	EA	1
77	6	XBOZZ		3006811-7	92392	CLAMP: LOOP, FUEL HOSE	EA	1
77	7	PAOZZ	5305-00-069-5571	MS35297-83	96906	SCREW, CAP, HEXAGON HEAD: HOSE CLAMP, 7/16-14 THD SIZE, 3/4 IN. LG	EA	1
77	9	PAOZZ	5305-00-558-4901	MS35301-62	96906	SCREW, CAP, HEXAGON HEAD: SUPPORT BRACKET	EA	3
77	10	PAOZZ	5310-00-080-6004	MS15795-14	96906	WASHER, FLAT: SUPPORT BRACKET, 3/8 IN. ID	EA	3
77	11	XBOZZ		3050979-8	92392	BRACKET, SUPPORT, FILL AND GAGE TUBE	EA	1
77	12	PAOZZ	5310-00-637-9541	904206-0	92392	WASHER, LOCK: SUPPORT BRACKET, 3/8 IN. ID	EA	3
77	13	PAOZZ	5310-00-012-0377	MS35690-605	96906	NUT, PLAIN, HEXAGON: SUPPORT BRACKET, 3/8-16 THD SIZE	EA	3
77	14	PAOZZ	4710-00-115-0490	3051103-4	92392	TUBE FUEL GAGE	EA	1
77	15	PAOZZ	6680-00-465-1574	3051094-5	92392	GAGE: FUEL LEVEL	EA	1
77	16	XBOZZ	2910-00-166-4302	3050983-0	92392	NECK ASSEMBLY, FUEL TANK FILLER	EA	1
77	17	PAOZZ	2910-00-111-5191	3051868-2	92392	CAP: TANK FILL	EA	1
77	18	PAOZZ		910160-1	92392	SCREW, MACHINE: FUEL TANK CHAIN	EA	1
77	19	XBOZZ		3054135-3	92392	STRAINER, FUEL	EA	1
77	20	XBOZZ		3051869-0	92392	CHAIN: FILL CAP	EA	1
77	21	PCOZZ	4720-00-110-1943	3028393-1	92392	HOSE, FILLER TUBE TO TANK	EA	1
77	22	PAOZZ	4730-00-277-7137	921915-5	90940	CLAMP, HOSE: FILLER TUBE HOSE	EA	2
77	23	PCOZZ	4720-00-115-0229	3044937-5	92392	HOSE, TUBE TO TANK	EA	1

(1) ILLUSTRATION (a) FIG NO.	(b) ITEM NO.	(2) SMR CODE	(3) FEDERAL STOCK NUMBER	(4) PART NUMBER	(5) FSCM	(6) DESCRIPTION USABLE ON CODE	(7) U/M	(8) QTY INC IN UNIT
77	24	PAOZZ	4730-00-845-5449	36P	66295	CLAMP, HOSE: LEVEL GAGE TUBE	EA	2
77	25	PAOZZ	4710-00-115-0489	3051039-0	92392	TUBE ASSEMBLY, TANK TO VALVE	EA	1
77	26	PAOZZ	4820-00-174-0325	40E	30327	VALVE, SHUTOFF	EA	1
77	27	PAOZZ	4730-00-111-2508	3010159-6	92392	PLUG, ASSEMBLY, DRAIN	EA	1
77	28	PAOZZ	5330-00-883-8221	2155	79150	GASKET: DRAIN PLUG	EA	1
77	29	PAOZZ	4820-00-849-1220	140	79470	COCK, DRAIN: FUEL TANK	EA	1
77	30	PAOZZ	4730-00-138-1889	925011-9	92392	ELBOW, PIPE TO HOSE: TANK TO FUEL LINE	EA	1
77	31	PCOZZ	5330-00-804-5695	MS28778-6	96906	PACKING, PREFORMED: FUEL LINE ELBOW	EA	1
77	32	PAFZZ	5310-00-982-6809	MS21044LN10	96906	NUT, SELF-LOCKING, HEXAGON: TANK MTG, 5/8-18 THD SIZE	EA	8
						GROUP 22 - THROTTLE CONTROL		
78	1	PAOZZ	5310-00-012-0377	MS35690-605	96906	NUT, PLAIN, HEXAGON: PEDAL STOP	EA	2
78	2	PAOZZ	5305-00-846-5703	MS90728-70	96906	SCREW, CAP, HEXAGON HEAD: PEDAL STOP	EA	1
78	3	XBOZZ		3051793-2	92392	PEDAL CONTROL	EA	1
78	4	PAOZZ	5315-00-236-8353	MS24665-306	96906	PIN, COTTER PIVOT PIN	EA	1
78	5	PAOZZ		3048332-6	92392	PIN, PIVOT: PEDAL	EA	1
78	6	PAOZZ	3930-00-969-5543	R107	78643	BALL JOINT: CONTROL ROD	EA	4
78	7	XBOZZ		3050420-3	92392	ROD, CONTROL FRONT	EA	1
78	8	PAOZZ	5310-00-971-7989	MS35691-5	96906	NUT, PLAIN, HEXAGON	EA	4
78	9	XBOZZ		3043391-6	92392	LEVER, CONTROL	EA	1
78	10	PAOZZ	5310-00-010-3322	904207-8	92392	WASHER, LOCK: ROD BEARING	EA	4
78	11	PAOZZ	5310-00-720-8636	MS35691-725	96906	NUT, PLAIN, HEXAGON: ROD BEARING	EA	4
78	12	XBOZZ	2910-00-425-0419	3045896-2	92392	ROD, CONTROL REAR	EA	1
78	13	XBOZZ		3018302-4	92392	CLAMP, LOOP: REAR CONTROL ROD	EA	1
78	14	PAOZZ	3120-00-229-0327	FRE7	57448	BEARING: ROD END	EA	2
78	15	PAOZZ	5360-00-841-2267	3014236-9	92392	SPRING, HELICAL, EXTERIOR, PEDAL RETURN	EA	1
78		XBOZZ		3050228-0	92392	BRACKET: ACCELERATOR MTG	EA	1
						GROUP 23 - INSTRUMENT PANEL, GAGES, LIGHTS, AND SWITCHES		
79	1	PAOZZ		M13542	74400	LAMP, UNIT, DASH	EA	2
79	2	XAOZZ	5340-00-955-0319	EX2689	74400	RING, LOCK	EA	1
79	3	XAOZZ		EX2687	74400	COVER	EA	1
79	4	XAOZZ		EX2691	92392	GASKET	EA	1
79	5	XAOZZ		EX2685	92392	LENS	EA	1
79	6	PAOZZ	6240-00-019-3093	074452	92392	LAMP, INCANDESCENT	EA	1
79	7	XAOZZ		M13542-1	74400	BASE ASSEMBLY, WITH WIRE	EA	1
79	8	PAOZZ	6210-00-800-4776	103-3502-1331-40	72619	LAMP, INDICATOR	EA	2
79	9	PAOZZ	6240-00-553-1038	6560C-24U	08108	LAMP, INCANDESCENT	EA	2
79	10	PAOZZ		701X3	79740	ELBOW, PIPE: TUBE TO GAGE	EA	2
79	11	XBOZZ		3048711-0	92392	TUBE: TOP PRESSURE GAGE	EA	2
79	12	PAOZZ	5925-00-283-6511	PDA25	82647	CIRCUIT BREAKER	EA	1
79	13	PAOZZ	5310-00-010-3319	904204-5	92392	WASHER, LOCK: CIRCUIT BREAKER AND BUZZER MTG	EA	4
79	14	PAOZZ	5310-00-012-1902	121902	00000	NUT, PLAIN, HEXAGON: CIRCUIT BREAKER AND BUZZER MTG	EA	4

(1) ILLUSTRATION (a) FIG NO.	(b) ITEM NO.	(2) SMR CODE	(3) NATIONAL STOCK NUMBER	(4) PART NUMBER	(5) FSCM	(6) DESCRIPTION USABLE ON CODE	(7) U/M	(8) QTY INC IN UNIT
79	15	PAOZZ	6350-00-899-4527	1116998	16764	BUZZER: AIR PRESSURE AND TRANSMISSION OIL TEMPERATURE	EA	2
79		XBOZZ		1915309	16764	CLIP	EA	2
79		PAOZZ	5305-00-889-3002	453418	16764	SCREW	EA	2
79	16	PAOZZ	5930-00-699-9438	3029296-5	92392	SWITCH, IGNITION	EA	1
79	17	XAOZZ		3029297-3	92392	LEVER, SWITCH	EA	1
79	18	PAOZZ	5930-00-296-6318	MS39061-1	96906	SWITCH, TOGGLE: LIGHTS	EA	2
79	19	PAOZZ	5925-00-111-5063	PDA6	73803	CIRCUIT BREAKER	EA	1
79	20	PAOZZ	2590-00-307-8856	M551113-1	96906	SWITCH, LIGHTS	EA	1
79	21	XBOZZ		3048713	92392	TUBE: OIL PRESSURE	EA	1
79	22	XBOZZ		3052177-7	92392	PANEL, INSTRUMENT	EA	1
79	23	PAOZZ		923683-7	92392	SCREW, SELF-TAPPING: PANEL MTG	EA	4
79	24	PAOZZ	6685-00-453-9013	346DT101	57733	INDICATOR, TEMPERATURE, TRANSMISSION	EA	1
79	25	PAOZZ	6620-00-869-7247	3053222-0	92392	INDICATOR, PRESSURE, OIL	EA	1
79	26	PAOZZ		925329-5	92329	SCREW, MACHINE: LIGHT SWITCH MTG	EA	4
79	27	PAOZZ		917441-8	92392	SCREW, MACHINE: CIRCUIT BREAKER MTG	EA	8
79	28	PAOZZ	5305-00-068-0506	MS90726-6	96906	SCREW, CAP, HEXAGON HEAD: BUZZER MTG	EA	4
79	29	PAOZZ	6685-00-133-7521	346DS137	57733	INDICATOR, TEMPERATURE, WATER	EA	1
79	30	PAOZZ		36OFK	57733	INDICATOR, PRESSURE	EA	1
79	31	PAOZZ	6685-00-133-7522	342EB	57733	INDICATOR, PRESSURE, AIR	EA	1
79	32	PAOZZ	6625-00-168-0488	3048619-5	92392	AMMETER	EA	1
79	33	PAOZZ		917443-4	92392	SCREW, MACHINE: CIRCUIT BREAKER MTG	EA	4
79	34	PAOZZ	2920-00-132-8283	1996041	16764	SWITCH, PUSH, HORN	EA	1
80	1	PAOZZ	6645-00-601-8613	M1509	74400	PLATE, MOUNTING: TIME METER	EA	1
80	2	PAOZZ	6645-00-089-8842	15001-2	74400	METER, TIME TOTALIZING	EA	1
80	3	PAOZZ		903752-4	92392	SCREW, MACHINE: TIME METER MTG	EA	3
81	1	PAOZZ	5930-00-688-9882	7771274-1	00000	SWITCH ASSEMBLY, THERMOSTAT	EA	1
81	2	PAOZZ	5930-00-485-9000	1996005	16764	SWITCH, PUSH, STARTING	EA	1
81	3	XBOZZ		3050345-2	92392	BRACKET: STARTING SWITCH	EA	1
81	4	PAOZZ	5310-00-012-1902	121902	00000	NUT, PLAIN, HEXAGON: STARTER SWITCH AND SOLENOID	EA	6
81	5	PAOZZ	5310-00-010-3319	904204-5	92392	WASHER, LOCK: STARTING SWITCH AND SOLENOID	EA	6
81	6	XBOZZ		3050321-3	92392	BOLT, U: STARTING SWITCH	EA	2
81	7	PAOZZ	5305-00-068-0506	MS90726-6	96906	SCREW, CAP, HEXAGON HEAD: STARTER SOLENOID	EA	2
81	8	PAOZZ	5310-00-809-4058	MS27183-10	96906	WASHER, FLAT: STARTER SOLENOID	EA	2
81	9	PAOZZ	2920-00-735-9542	001484	16764	RELAY, SOLENOID	EA	1
81	10	PAOZZ		924645-5	92392	NIPPLE, PIPE: PRESSURE SWITCH	EA	1
81	11	PAOZZ		092016B	92392	TEE, PIPE: PRESSURE SWITCH	EA	1
81	12	PAOZZ	5930-00-501-1707	M1672	74400	SWITCH, PRESSURE	EA	1
81	13	PAOZZ	4730-00-072-4877	681X3	79470	CONNECTOR, PRESSURE, OIL	EA	2
81	14	PAOZZ	5305-00-269-3209	MS90725-58	96906	SCREW, CAP, HEXAGON HEAD: SOLENOID BAR	EA	2
81	15	PAOZZ	5310-00-637-9541	904206-0	92392	WASHER, LOCK: SOLENOID BAR	EA	2
81	16	PAOZZ		3050974-9	92392	BAR, MOUNTING: SOLENOID	EA	1
82	1	PAOZZ		213741	00000	SCREW, CAP, HEXAGON HEAD: PLATE MTG	EA	2
82	2	PAOZZ	5305-00-068-0498	MS90725-1	96906	SCREW, CAP, HEXAGON HEAD: RELAY MTG	EA	2

ATION (b) ITEM NO.	(2) SMR CODE	(3) FEDERAL STOCK NUMBER	(4) PART NUMBER	(5) FSCM	(6) DESCRIPTION USABLE ON CODE	(7) U/M	(8) QTY INC IN UNIT
3	XBOZZ		3052103-3	92392	PLATE: RELAY MTG	EA	1
4	PAOZZ	2590-00-231-6543	3052094-4	92392	RELAY ASSEMBLY	EA	1
5	PAOZZ	5310-00-637-9541	904206-0	92392	WASHER, LOCK: RELAY AND PLATE MTG	EA	4
6	PAOZZ	5310-00-010-9084	109084	00000	NUT, PLAIN, HEXAGON: RELAY AND PLATE MTG	EA	4
7	PAOZZ	5925-00-520-4666	PDLA45	73803	CIRCUIT BREAKER: 45 AMP	EA	1
8	PAOZZ	5305-00-071-2242	MS90725-9	96906	SCREW, CAP, HEXAGON HEAD: SLAVE RECEPTACLE MTG	EA	4
9	PAOZZ	5935-00-814-7432	MS75058-1	96906	RECEPTACLE ASSEMBLY, SLAVE	EA	1
10	PAOZZ	5310-00-010-3319	904204-5	92392	WASHER, LOCK: SLAVE RECEPTACLE MTG	EA	4
11	PAOZZ	5310-00-010-9084	109084	00000	NUT, PLAIN, HEXAGON: SLAVE RECEPTACLE MTG	EA	4
12	PAOZZ	5945-00-409-3883	70844810B01	80211	RELAY ARMATURE (REVERSE POLARITY PROTECTOR)	EA	1
13	PAOZZ	5905-00-134-9821	17C44555A07	94990	RESISTOR	EA	1
	XBOZZ		TC171	75272	CLAMP, LOOP: WIRING	EA	4
	XBOZZ		3044015-0	92392	CLAMP: WIRING	EA	8
	XBOZZ		B2	06229	CLAMP: WIRING	EA	1
	XBOZZ	5340-00-592-7996	N7	06229	CLAMP: WIRING	EA	1
	XBOZZ		TC110	75272	CLAMP, LOOP: WIRING	EA	2
	XBOZZ		3052077-9	92392	WIRE ASSEMBLY: CIRCUIT BREAKER TO AMMETER	EA	1
	XBOZZ		3052093-6	92392	WIRE ASSEMBLY: LEFT SIDE OF INSTRUMENT PANEL	EA	1
	PAOZZ	5935-00-771-6884	7716884	19207	CONNECTOR, PLUG, ELECTRICAL	EA	1
	PCOZZ	5365-00-772-2323	7722323	19207	GROMMET	EA	1
	PAOZZ	5935-00-333-9414	7723308	00000	NUT, RETAINING	EA	1
	XBFZZ		3052149-6	92392	WIRING HARNESS: HEADLIGHT	EA	1
	PAOZZ	5935-00-686-2600	8724245	19207	CONNECTOR, PLUG, ELECTRICAL	EA	1
	PCOZZ	5340-00-772-2323	7722323	00000	GROMMET	EA	1
	PAOZZ	5935-00-333-9414	7723308	00000	NUT, RETAINING	EA	1
	XBOZZ	5935-00-686-2599	874258	19207	CONNECTOR, RECEPTACLE, ELECTRICAL	EA	1
	XBOZZ	5975-00-771-6634	7716634	19207	COUPLING	EA	1
	PCOZZ	5365-00-090-5426	7722333	00000	GROMMET	EA	1
	PAOZZ	5935-00-772-3309	7723309	00000	NUT, RETAINING	EA	1
	XBOZZ	5935-00-811-0942	8724246	19207	CONNECTOR, PLUG, ELECTRICAL	EA	1
	PAOZZ	5310-00-655-9860	8701325	19207	NUT, SLEEVE	EA	1
	XBOZZ		3052306-2	92392	WIRE: STARTER GROUND	EA	1
	XBOZZ		3052309-6	92392	WIRE: CIRCUIT BREAKER TO AMMETER	EA	1
	XBOZZ		3052042-3	92392	WIRE ASSEMBLY, GROUND	EA	1
	XBOZZ		3052041-5	92392	WIRING HARNESS ASSEMBLY: CIRCUIT BREAKER TO IGNITION SWITCH	EA	2
	XBOZZ		3052076-1	92392	WIRE: RIGHT SIDE OF INSTRUMENT PANEL	EA	1
	XBOZZ		3052026-4	92392	WIRE: CIRCUIT BREAKER TO STARTER SOLENOID	EA	1
	XBOZZ		3052127-2	92392	WIRE, SOLENOID TO END	EA	1
	XBOZZ		3052078-7	92392	WIRE ASSEMBLY: STARTING SOLENOID TO STARTER SOLENOID	EA	1
	XBOZZ		3052079-5	92392	WIRE, SOLENOID TO STARTER	EA	1
	XBOZZ		3052160-3	92392	WIRE CABLE	EA	1
	XBOZZ		3052167-8	92392	WIRE: FUEL INJECTION PUMP SHUTOFF	EA	1
	XBOZZ		3052110-8	92392	WIRING HARNESS	EA	1

(1) ILLUSTRATION (a) FIG NO.	(b) ITEM NO.	(2) SMR CODE	(3) FEDERAL STOCK NUMBER	(4) PART NUMBER	(5) FSCM	(6) DESCRIPTION USABLE ON CODE	(7) U/M	(8) QTY INC IN UNIT
C		XBOZZ		3052298-1	92392	WIRE: LEFT WARNING LITE TO BUZZER	EA	1
						GROUP 24 - AIR COMPRESSOR		
C	83	1	PAOZZ	4040351-1	92392	NUT, PULLEY: 3/4 IN. ID, 16 THD SIZE	EA	1
C	83	2	PAOZZ	5315-012-0123	MS24665-355	PIN, COTTER: PULLEY NUT, 1/8 IN. DIA, 1 1/4 IN. LG	EA	1
C	83	3	PAOZZ	3020-114-0988	4025652-1	PULLEY, HALF	EA	1
C	83	4	PCOZZ	3030-920-6711	4027245-2	BELT, DRIVE	EA	1
C	83	5	PAOZZ	3020-114-0989	4025653-9	PULLEY, HALF	EA	1
C	83	6	PAOZZ		102593	SETSCREW: PULLEY MTG, 3/8-16 X 1/2 IN. LG	EA	3
C	83	7	PAOZZ		HP808	KEY, WOODRUFF: PULLEY MTG, 1/4 X 1 IN.	EA	1
C	83	8	XBOZZ		921727-4	ADAPTER, PIPE TO HOSE: WATER PUMP TO COMPRESSOR	EA	1
C	83	9	PAOZZ	4730-289-5895	AN737RM46	CLAMP, HOSE: COMPRESSOR HOSES	EA	4
C	83	10	MOOZZ			HOSE, WATER OUTLET, COMPRESSOR MANUFACTURE FROM:	EA	1
C	83		PCOZZ	4720-541-8859		HOSE, AS REQUIRED	FT	
C	83	11	PAOZZ		4255286-9	ELBOW, PIPE TO HOSE: COMPRESSOR LINES	EA	3
C	83	12	PAOZZ		140039	BUSHING, REDUCER: ELBOW TO THERMOSTAT HOUSING, 1/2 X 3/8 IN.	EA	1
C	83	13	MOOZZ			HOSE, WATER INLET, COMPRESSOR MANUFACTURE FROM:	EA	1
C	83		PCOZZ	4720-541-8859		HOSE, AS REQUIRED	FT	
C	83	14	XBOZZ		4716090-8	CLAMP, LOOP: OIL LINE	EA	1
C	83	15	XBOZZ		4025634-9	CLAMP, LOOP, ANGLE: OIL LINE	EA	1
C	83	16	PAOZZ	4730-585-7303	61FL1-4	NUT, TUBE: OIL TUBE	EA	2
C	83	17	PAOZZ	4730-496-7337	68FL1-4X1-8	ADAPTER, PIPE TO TUBE: OIL TUBE	EA	1
C	83	18	PAOZZ	4730-430-4390	69FL1-4X1-8	ELBOW, PIPE TO TUBE: OIL LINE	EA	1
C	83	19	XBOZZ		4025507-7	TUBE ASSEMBLY, OIL COMPRESSOR TO CRANKCASE	EA	1
C	83	20	PAOZZ	5365-215-7421	60FL1-4	SLEEVE, COMPRESSION: OIL RUBBER LINE	EA	2
C	83	21	XBOZZ	4720-919-9748	915399-0	ELBOW, PIPE TO TUBE: OIL LINE	EA	1
C	83	22	PCOZZ	5330-402-5849	4059709-8	GASKET, AIR INLET, ADAPTER	EA	1
C	83	23	XBOZZ		4059708-0	ELBOW, AIR INLET	EA	1
C	83	24	XBOZZ		681X3	ADAPTER, PIPE TO TUBE: COMPRESSOR TO TUBE	EA	2
C	83	25	PAOZZ	4710-115-0503	3051025-9	TUBE: TO COMPRESSOR	EA	1
C	83	26	PAOZZ	4730-702-2750	MS35842-3	CLAMP, HOSE: AIR INLET	EA	4
C	83	27	MOOZZ		16R2X	HOSE, AIR INLET TUBE MANUFACTURE FROM:	EA	2
C	83		PCOZZ	2940-603-4555		HOSE	FT	
C	83	28	XBOZZ		4027197-5	TUBE, AIR INLET COMPRESSOR	EA	1
C	83	29	PAOZZ	5306-225-8504	MS90725-40	SCREW, CAP, HEXAGON HEAD: INLET ELBOW MTG, 5/16-18 THD SIZE, 2 IN. LG	EA	2
C	83	30	PAOZZ		917330-3	WASHER, FLAT: INLET ELBOW MTG, 1 1/32 IN. ID, COPPER	EA	2
C	83	31	PAOZZ	4730-088-8833	69FL	ELBOW, PIPE TO TUBE: COMPRESSOR TO LINE	EA	1
C	83	32	PAOZZ		68X8A8X8	CONNECTOR: ELBOW TO TUBE	EA	1
C	83	33	PAOZZ	5310-010-3320	MS35338-7	WASHER, LOCK: ADAPTER MTG, 5/16 IN. ID	EA	2
C	83	34	PAOZZ	5306-225-8498	MS90725-33	SCREW, CAP, HEXAGON HEAD: ADAPTER MTG, 5/16-18 THD SIZE, 7/8 IN. LG	EA	2
C	83	35	PAOZZ		3029930-9	ADAPTER: HEAD TO LINE	EA	1

(1) ILLUSTRATION (a) FIG NO.	(b) ITEM NO.	(2) SMR CODE	(3) FEDERAL STOCK NUMBER	(4) PART NUMBER	(5) FSCM	(6) DESCRIPTION USABLE ON CODE	(7) U/M	(8) QTY INC IN UNIT
83	42	PAOZZ	4730-192-9450	WWN351TYPE1	81348	NIPPLE, PIPE: HOSE TO GOVERNOR, 1/4 IN. NPT, 7/8 IN. LG	EA	1
83	43	PAOZZ		105417	00000	TEE, PIPE: TO GOVERNOR, 1/4 IN. NPT	EA	1
83	44	PAOZZ	4730-391-3771	48X4A	79470	ELBOW, PIPE TO TUBE: AIR LINE TO TEE	EA	2
83	45	PAOZZ		3053228-7	92392	ELBOW, PIPE TO TUBE: AIR LINE TO GOVERNOR	EA	2
83	46	PAOZZ		3053227-1	92392	TUBE: AIR LINE TO GOVERNOR	EA	1
83	47	XBOZZ		3037002-7	92392	CLAMP, LOOP: AIR LINE	EA	1
84	6	PCOZZ	5330-291-8977	204820	06853	GASKET: FITTING	EA	1
85	12	PAOZZ		4053235-0	92392	COCK, DRAIN	EA	1
86	8	PAOZZ	3120-115-1393	4056130-0	92392	WASHER, THRUST: CRANKSHAFT	EA	1
87	3	PCOZZ	5330-531-3197	236577	06853	GASKET: GOVERNOR	EA	1
87	4	PAOZZ	3805-134-9346	4389823-8	92392	GOVERNOR ASSEMBLY	EA	1
88	1	XAOZZ		240347-5	06853	COVER, GOVERNOR	EA	1
88	2	XAOZZ	5340-738-7552	240345-9	06853	RING, RETAINING	EA	1
88	3	XAOZZ	5360-225-0706	275202-0	06853	SPRING ASSEMBLY	EA	1
88	4	XAOZZ		240339-2	06853	STEM	EA	1
88	9	XAOZZ	2815-603-1532	275201-2	06853	PISTON ASSEMBLY	EA	1
88	10	XAOZZ	2530-225-0708	240334-3	06853	VALVE	EA	1
88	11	XAOZZ	5360-225-0709	240336-8	06853	SPRING, PISTON	EA	1
88	12	XAOZZ		275230-1	06853	BODY ASSEMBLY, GOVERNOR	EA	1
88	13	XAOZZ		274070	72582	PLUG, PIPE: BODY	EA	3
88	14	XAOZZ	4730-225-0710	240346-7	06853	FILTER: BODY	EA	2
						GROUP 25 - STEERING GEAR AND TIE ROD		
89	1	PAOZZ	2530-960-9337	3040	77915	WHEEL, STEERING	EA	1
89	2	XBOZZ		3048968-6	92392	SPACER, MEDALLION	EA	1
89	3	PCOZZ	5330-115-6171	923582-1	92392	PACKING, PREFORMED: SPACER	EA	1
89	4	XBOZZ	2530-419-8688	3048964-5	92392	MEDALLION, STEERING WHEEL	EA	1
89	5	PAOZZ	5305-855-0959	MS24629-41	96906	SCREW, MACHINE: MEDALLION	EA	3
90	20	PAOZZ	5310-879-6493	265079	52788	WASHER: SHAFT	EA	1
90	21	PAOZZ	5310-656-0227	913177-2	92392	NUT: STEERING WHEEL	EA	1
90	31	PAOZZ	4730-021-9199	209199	00000	PLUG, PIPE: STEERING GEAR	EA	1
91	1	PAOZZ	2530-133-9972	5695788	52788	ARM, STEERING, PITMAN	EA	1
91	4	PAOOO		6242X	04716	TIE ROD ASSEMBLY	EA	1
91	5	PAOZZ		3133	04716	SEAL: TIE ROD	EA	
91	6	XBOZZ		6242X1	04716	TIE ROD	EA	1
91	7	XAOZZ		2586-10	04716	NUT, SELF-LOCKING, HEXAGON: TIE ROD	EA	1
91	8	PAOZZ	2530-115-0243	6235X	04716	END ASSEMBLY, ROD	EA	1
91	9	PCOZZ	5330-110-5698	2110-2	04716	SEAL: ROD END	EA	1
91	10	PAOZZ	5310-823-8803	MS15795-20	96906	WASHER, FLAT: TIE ROD, 5/8 IN. ID	EA	2
91	11	PAOZZ		218512	00000	NUT, CASTELLATED, HEXAGON: TIE ROD, 5/8-18 THD SIZE	EA	2
91	12	PAOZZ	5315-298-1481	MS24665-357	96906	PIN, COTTER: TIE ROD END, 1/8 IN. DIA, 1 1/2 IN. LG	EA	2
91		PCOZZ		3051826-0	92392	SEAL: TIE ROD	EA	1
91	13	XBOZZ		3050816-2	92392	BRACKET, TIE ROD	EA	4

	(1) ILLUSTRATION (a) FIG NO.	(b) ITEM NO.	(2) SMR CODE	(3) FEDERAL STOCK NUMBER	(4) PART NUMBER	(5) FSCM	(6) DESCRIPTION USABLE ON CODE	(7) U/M	(8) QTY INC IN UNIT
C	91	14	PAOZZ	5310-068-8067	MS17829-8F	96906	NUT, SELF-LOCKING, HEXAGON: TIE ROD BRACKET MTG, 1/2-20 THD SIZE	EA	4
C	91	15	PAOZZ	5305-725-4187	MS90726-114	96906	SCREW, CAP, HEXAGON HEAD: TIE ROD BRACKET MTG, 1/2-20 THD SIZE, 1 3/4 IN. LG	EA	4
							GROUP 26 - STEERING CYLINDER, VALVES AND PUMP		
C	92	1	MOOOO		3050851-9	92392	HOSE ASSEMBLY: VALVE TO CYLINDER MANUFACTURE FROM:	EA	2
	92		PAOZZ	4730-913-7406			ELBOW, 2 REQUIRED	EA	
	92		PAOZZ	3930-060-4219			ELBOW, 2 REQUIRED	EA	
	92		PAOZZ		900564-43	01276	GUARD, 2 REQUIRED	EA	
	92		PAOZZ	4720-930-4515			HOSE, 6 FT 6 IN. REQUIRED FOR EACH HOSE	FT	
C	92	2	PAOZZ	4730-933-0742	923157-2	92392	TEE, PIPE TO TUBE: HOSE TO CYLINDER	EA	2
C	92	3	MOOOO		3050856-8	92392	HOSE ASSEMBLY, CYLINDER TO CYLINDER MANUFACTURE FROM:	EA	2
C	92		PAOZZ	4730-952-9038			FITTING, 2 REQUIRED	EA	
C	92		PCOZZ	4720-930-4509			HOSE, 3 FT 6 IN. REQUIRED FOR EACH HOSE	FT	
C	92	4	PAOZZ		2062-8-8S	01276	ELBOW, PIPE TO TUBE: STEERING LINE	EA	3
C	92	5	XBOZZ		3044055-6	92392	CLAMP, LOOP: HYDRAULIC LINE	EA	1
C	92	6	PAOZZ	5305-269-3209	MS90725-58	96906	SCREW, CAP, HEXAGON HEAD: CLAMP MTG	EA	1
C	92	7	PAOZZ		MS35338-4	96906	WASHER, LOCK: CLAMP MTG	EA	1
C	92	8	XBOZZ		3011248-6	92392	CLAMP, LOOP: HYDRAULIC HOSE	EA	1
C	92	9	PAOZZ	4730-853-1182	202702-8-8S	01276	ADAPTER, PIPE TO HOSE: STEERING HOSE	EA	1
C	92	10	PAOZZ	5315-839-5822	MS24665-353	96906	PIN, COTTER: LOCK PIN, 1/8 IN. DIA, 1 IN. LG	EA	4
C	92	11	XBOZZ	5315-401-5085	3042706	92392	PIN, CONNECTING: CYLINDER MTG	EA	4
C	92	12	XBOZZ		3001621	92392	PIN, LOCK: CONNECTING PIN	EA	4
C	92	13	PAOHH	2530-012-2046	3050882-4	92392	CYLINDER ASSEMBLY, POWER STEERING	EA	2
C	93	14	PAOZZ	4730-172-0034	MS15006-6	96906	FITTING, LUBRICATION: TUBE	EA	2
C	94		PAOHH	2530-110-9608	CAT219	02892	PUMP ASSEMBLY, STEERING	EA	1
C	94		PAOZZ	5305-042-6417	MS90725-113	96906	SCREW, CAP, HEXAGON HEAD: PUMP MTG	EA	4
C	94		PAOZZ	5310-010-3323	MS35338-10	96906	WASHER, LOCK: PUMP MTG	EA	4
							GROUP 27 - PROPELLER SHAFTS		
C	95		PAOOO	2520-468-8187	956-04-21664	79780	PROPELLER SHAFT, REAR AXLE	EA	1
C	95	1	PAOOO	2520-133-9963	5NYSW28-98	79780	YOKE ASSEMBLY, SLIP	EA	1
C	95	2	PAOZZ		A282706	00000	NUT, PLAIN, ROUND: PACKING RETAINER	EA	1
C	95	3	PAOZZ		211-02	79780	WASHER: PACKING RETAINER	EA	1
C	95	4	PCOZZ	5330-311-5305	2148585	24617	WASHER, FELT: GREASE	EA	1
C	95	5	PAOZZ	2520-133-9962	5ONL528-22	79780	YOKE ASSEMBLY, TUBE	EA	1
C	95	6	PAOOO	2520-521-6186	CP58N4	79780	CROSS ASSEMBLY, YOKE	EA	2
C	95	7	PAOZZ	5306-225-9084	MS90726-29	96906	SCREW, CAP, HEXAGON HEAD: CROSS MTG	EA	16
C	95	8	PAOZZ		5N9	79780	PLATE, LOCK: CROSS MTG	EA	8
C	95	9	PAOZZ		5N81	79780	PLATE, COVER: CROSS	EA	8
C	95	10	PAOZZ	4730-172-0010	MS15002-1	96906	FITTING, LUBRICATION	EA	2
C	95		PCOZZ	2520-718-7132	58N3-1	79780	SEAL	EA	8

(1) ILLUSTRATION (a) FIG NO.	(b) ITEM NO.	(2) SMR CODE	(3) NATIONAL STOCK NUMBER	(4) PART NUMBER	(5) FSCM	(6) DESCRIPTION USABLE ON CODE	(7) U/M	(8) QTY INC IN UNIT
96		PA000	2520-00-133-9958	3042747-0	92392	PROPELLER SHAFT ASSEMBLY, FRONT AXLE	EA	1
96	1	PA000	2520-00-352-2168	CP6N	70960	CROSS ASSEMBLY, SHAFT	EA	1
96	2	PAOZZ	5306-00-225-9084	MS90726-29	96906	SCREW, CAP, HEXAGON HEAD: CROSS MTG	EA	8
96	3	PAOZZ	2520-00-496-1228	6N9	70960	PLATE, LOCKING: CROSS MTG	EA	4
96	4	PAOZZ	2520-00-028-9964	6NB1	70960	PLATE, COVER: CROSS	EA	4
96	5	PAOZZ	4730-00-172-0010	MS15002-1	96906	FITTING, LUBRICATION	EA	1
96	6	XBOZZ		3042816-3	92392	TUBE ASSEMBLY	EA	1
96	7	PAOZZ	4730-00-018-9566	444854	00000	PLUG, OIL HOLE	EA	1
96	8	PCOZZ	5330-00-311-5305	2148585	24517	WASHER, FELT: GREASE	EA	1
96	9	PAOZZ	5310-00-350-4435	31102	70960	WASHER, SPLIT: PACKING RETAINING	EA	1
96	10	PAOZZ	2520-00-425-3310	2148584	24617	CAP, DUST: PACKING RETAINER	EA	1
96	11	PAOZZ	5310-00-115-6215	921140-0	92392	NUT, SELF-LOCKING, HEXAGON: YOKE MTG	EA	1
96	12	PAOZZ	5310-00-115-6241	3022056-0	92392	WASHER: YOKE MTG	EA	1
96	13	PAOZZ	2520-00-133-9966	6NYS2-90	79780	YOKE: DRIVE SHAFT	EA	1
96	14	PAOZZ	2520-00-133-9950	35532-5	79780	SHAFT	EA	1
97	1	PAOZZ	4730-00-050-4208	MS15003-1	96906	FITTING, LUBRICATION: DRIVE SHAFTS	EA	3
97	2	PA000	2520-00-895-3230	928-84-25857	80318	PROPELLER SHAFT, CENTER	EA	1
97	3	PA000	2520-00-352-2168	CP6N	70960	CROSS ASSEMBLY, SHAFT	EA	2
97	4	PAOZZ	5306-00-225-9084	MS90726-29	96906	SCREW, CAP, HEXAGON HEAD: CROSS MTG	EA	16
97	5	PAOZZ	2520-00-496-1228	6N9	70960	PLATE, LOCKING: CROSS MTG	EA	8
97	6	PAOZZ	2520-00-028-9964	6NB1	70960	PLATE, COVER: CROSS	EA	8
97	7	PAOZZ		3013807-7	92392	VALVE, RELIEF	EA	2
97	8	PAOZZ		928-27-25857	79780	TUBE ASSEMBLY, YOKE	EA	8
97	9	PAOZZ		SPGR5-2	79780	SPRING: BALL	EA	8
97	10	PAOZZ	3110-00-100-6156	145645	24617	BALL, STEEL	EA	28
97	11	XAOZZ		6NYSW4-4	79780	SHAFT ASSEMBLY, YOKE	EA	1
97	12	XBOZZ		5000-275	79136	RING, RETAINING: PACKING	EA	1
97	13	PAOZZ	5310-00-119-1639	WAR44-3	78500	WASHER, BRASS	EA	1
97	14	PCOZZ	5330-00-110-5693	SERUR34-1	79780	SEAL, PLAIN: DRIVE SHAFT	EA	1
97	15	PAOZZ	3120-00-115-3036	WAR34-4	79780	WASHER, THRUST	EA	1
						GROUP 28 - TRANSMISSION OIL FILTER, LINES AND FITTINGS		
99	1	XBOZZ		3005382-1	92392	CLAMP, LOOP: FILLER TUBE	EA	1
99	2	PAOZZ	6680-00-110-3966	195423-9	92392	DIP STICK	EA	1
99	3	PAOZZ	4710-00-115-0493	3050180-3	92392	TUBE, FILLER: TRANSMISSION	EA	1
99	4	PAOZZ	5310-00-010-3323	MS35338-10	96906	WASHER, LOCK: FILLER TUBE CLAMP	EA	1
99	5	PAOZZ	5305-00-781-3964	MS90725-107	96906	SCREW, CAP, HEXAGON HEAD: FILLER TUBE CLAMP	EA	1
99	6	M0000		3050852-7	92392	HOSE ASSEMBLY, FILTER TO TRANSMISSION MANUFACTURE FROM:	EA	1
99		PAOZZ	4730-00-937-0492			FITTING ASSEMBLY, 2 EA REQUIRED	EA	
99		PCOZZ	4720-00-110-1947			HOSE, 5 FT REQUIRED	FT	
99	7	PAOZZ	4730-00-278-3862	5822X12	79470	ELBOW, PIPE TO HOSE: HOSE TO FILTER	EA	2

	(1) ILLUSTRATION (a) FIG NO.	(b) ITEM NO.	(2) SMR CODE	(3) FEDERAL STOCK NUMBER	(4) PART NUMBER	(5) FSCM	(6) DESCRIPTION USABLE ON CODE	(7) U/M	(8) QTY INC IN UNIT
	99	8	MOOOO		3050853-5	92392	HOSE ASSEMBLY, TRANSMISSION MANUFACTURE FROM:	EA	1
	99		PAOZZ	4730-00-937-0492			FITTING ASSEMBLY, 2 EA REQUIRED	EA	
	99		PCOZZ	4720-00-110-1947			HOSE, 3 FT 6 IN. REQUIRED	FT	
	99	9	MOOOO		3050859-2	92392	HOSE ASSEMBLY, TRANSMISSION TO COOLER MANUFACTURE FROM:	EA	2
	99		PAOZZ				FITTING ASSEMBLY, PIN, 4 EA REQUIRED	EA	
	99		PCOZZ	4720-00-824-4373			HOSE, 5 FT REQUIRED	FT	
	99	10	PCOZZ	5330-00-947-3579	4378871-0	92392	GASKET: HOSE TO COOLER	EA	2
	99	11	PAOZZ	5310-00-637-9541	MS35338-46	96906	WASHER, LOCK: HOSE TO COOLER	EA	4
	99	12	PAOZZ	5305-00-558-4901	MS35301-62	96906	SCREW, CAP, HEXAGON HEAD: HOSE TO COOLER	EA	1
	99	13	PAOZZ	5305-00-269-3211	MS90725-60	96906	SCREW, CAP, HEXAGON HEAD: HOSE TO COOLER	EA	3
	99	14	XBOZZ		3044364-2	92392	CLAMP, LOOP: HOSE RETAINING	EA	1
	99	15	PAOZZ		923683-7	92392	SCREW, SELF-TAPPING: LOOP CLAMP	EA	1
	99	16	PAOZZ	4720-00-110-3666	3006439-8	92392	HOSE: FILLER TUBE TO TRANSMISSION	EA	1
	99	17	PAOZZ		MS35842-3	96906	CLAMP: FILLER TUBE HOSE	EA	2
	99	18	PAOZZ	4730-00-168-1842	H12420	99103	ADAPTER: HOSE TO TRANSMISSION	EA	1
	99	19	PAOZZ	4730-00-915-5477	921203-6	92392	ELBOW, PIPE TO HOSE: TRANSMISSION HOSE	EA	2
	99	20	PCOZZ	5330-00-929-9049	921206-9	92392	PACKING, PREFORMED: ELBOW	EA	2
	99	21	PAOZZ	4730-00-761-2955	5315X12	79470	ADAPTER, PIPE TO TUBE: HOSE TO TRANSMISSION	EA	1
	99	22	PCOZZ	5330-00-929-9049	921206-9	92392	PACKING, PREFORMED	EA	1
	100	1	PAOZZ		MS35690-525	96906	NUT, PLAIN, HEXAGON: FILTER MTG	EA	4
	100	2	PAOZZ	5310-00-010-3320	MS35338-7	96906	WASHER, LOCK: FILTER MTG	EA	4
	100	3	PAOZZ	5310-00-081-4219	MS27183-12	96906	WASHER, FLAT: FILTER MTG	EA	4
	100	4	PAOZZ		923683-7	92392	SCREW, SELF-TAPPING: PLATE MTG	EA	2
	100	5	XBOZZ		3047529-7	92392	PLATE, MOUNTING: OIL FILTER	EA	1
R	100	6	POOOO	4330-00-168-1828	6674819	81321	FILTER ASSEMBLY, OIL	EA	1
	100	7	PAOZZ	5310-00-010-3319	904204-5	92392	WASHER, LOCK; BRACKET MTG	EA	1
	100	8	PAOZZ	5310-00-011-4380	114380	00000	NUT, PLAIN, SQUARE: BRACKET MTG	EA	2
	100	9	XBOZZ		34428	81321	BRACKET: OIL FILTER	EA	1
	100	10	XAOZZ		64555	81321	BODY, FILTER	EA	1
	100	11	PAOZZ	4330-00-217-3588	33316-13	81321	ELEMENT ASSEMBLY, OIL	EA	1
	100	12	PCOZZ	5330-00-110-5694	6664119	81321	PACKING, PREFORMED: ELEMENT	EA	1
C	100	13	PAOZZ	5305-00-269-3214	MS90725-64	96906	SCREW, CAP, HEXAGON HEAD: HALF CLAMP	EA	2
	100	14	PAOZZ	5310-00-637-9541	MS35338-46	96906	WASHER, LOCK: HALF CLAMP	EA	2
	100	15	XAOZZ		64549	81321	CLAMP, HALF: COVER MTG	EA	2
	100	16	XBOZZ		6674144	81321	COVER ASSEMBLY, FILTER	EA	1
	100	17	PAOZZ	5305-00-071-2235	MS90725-16	96906	SCREW, MACHINE: CLAMP MTG	EA	2
	100	18	PAOZZ	5306-00-225-9088	MS90726-33	96906	SCREW, CAP, HEXAGON HEAD: FILTER MTG	EA	4
	100		XBOZZ		3053252-7	92392	BRACKET	EA	1
	100		PAOZZ		916383-3	92392	SCREW, CAP, HEXAGON HEAD: BRACKET MTG	EA	1
	100		PAOZZ	5310-00-012-0394	911115-4	92392	WASHER, FLAT: BRACKET	EA	2
	100		PAOZZ	5310-00-010-3319	904206-0	92392	WASHER, LOCK: BRACKET	EA	1
	100		PAOZZ	5310-00-011-7049	911041-2	92392	NUT, PLAIN, HEXAGON: BRACKET	EA	1

(1) ILLUSTRATION (a) FIG. NO.	(b) ITEM NO.	(2) SMR CODE	(3) FEDERAL STOCK NUMBER	(4) PART NUMBER	(5) FSCM	(6) DESCRIPTION USABLE ON CODE	(7) U/M	(8) QTY INC IN UNIT
100		XB0ZZ		3011248-6	92392	CLIP	EA	2
100		PA0ZZ		916225-6	92392	SCREW, CAP, HEXAGON HEAD: CLIP	EA	1
						GROUP 29 - TRANSMISSION ASSEMBLY CONTROLS AND TORQUE CONVERTER		
101	1	PA0ZZ	5355-812-4141	3001171-2	92392	KNOB, LEVER	EA	1
101	2	XB0ZZ		3051725-4	92392	PLATE: CONTROL LEVER	EA	1
101	3	XB0ZZ		3051759-3	92392	LEVER, TRANSMISSION CONTROL AND START	EA	1
101	4	PA0ZZ	5310-269-2809	MS90726-66	96906	SCREW, CAP, HEXAGON HEAD: LEVER MTG	EA	1
101	5	PA0ZZ	5310-637-9541	MS35338-46	96906	WASHER, LOCK: LEVER BALL JOINT CLAMP MTG	EA	7
101	6	PA0ZZ	5310-543-5973	MS35691-625	96906	NUT, PLAIN, HEXAGON: BALL JOINT AND LEVER MTG	EA	5
101	7	XB0ZZ		3051750-2	92392	CLAMP, SUPPORT: CONTROL LEVER	EA	1
101		XB0ZZ		3048960-3	51588	BUSHING: CLAMP	EA	1
101	8	XB0ZZ		3050390-8	92392	CLAMP: LEVER SUPPORT	EA	1
101	9	PA0ZZ	5310-269-2810	MS90726-68	96906	SCREW, CAP, HEXAGON HEAD: SUPPORT CLAMP	EA	2
101	10	PA0ZZ		3016399-2	92392	SPRING, HELICAL, COMPRESSION: LEVER RETURN	EA	1
101	11	PA0ZZ	5310-809-8541	MS27183-27	96906	WASHER, FLAT: RETURN SPRING	EA	1
101	12	XB0ZZ		3050370-0	92392	ROD, CLUTCH CONTROL	EA	1
101	13	XB0ZZ		3050319-7	92392	ROD, CONNECTING	EA	1
101	14	PA0ZZ	3930-904-5303	R109	78643	BALL JOINT: ROD	EA	4
101	15	XB0ZZ		3050400-5	92392	LEVER: TRANSMISSION CONTROL	EA	1
101	16	XB0ZZ		3026405-5	92392	ROD, THREADED: CONTROL LEVER	EA	1
101	17	XB0ZZ		3050771	92392	LEVER, CONNECTING	EA	1
101	18	PA0ZZ	5315-010-3496	103496	00000	PIN, STRAIGHT, HEADED: SHIFT BAR	EA	2
101	19	XB0ZZ		3050769-3	92392	BAR, CONNECTING	EA	2
101	20	PA0ZZ	5315-298-1481	MS24665-357	96906	PIN, COTTER: SHIFT BAR	EA	2
101	21	XB0ZZ		3048860-5	92392	WASHER, FLAT: CONNECTING LEVER	EA	1
101	22	PA0ZZ	3120-132-6952	3045248-6	92392	BEARING, ROD END: CONNECTING LEVER	EA	2
101	23	PA0ZZ	5310-010-3323	MS35338-10	96906	WASHER, LOCK: ROD END BEARING	EA	2
101	24	PA0ZZ	5310-732-6004	MS15795-14	96906	WASHER, FLAT: ROD END BEARING	EA	4
101	25	PA0ZZ	5310-732-0560	MS51968-14	96906	NUT, PLAIN, HEXAGON: ROD END BEARING	EA	2
101	26	PA0ZZ	3120-132-6953	3018142-4	92392	BEARING, ROD END: LEVER	EA	2
101	27	PA0ZZ	5310-010-3325	MS35338-12	96906	WASHER, LOCK: ROD END BEARING	EA	2
101	28	PA0ZZ	5305-725-4098	MS90726-160	96906	SCREW, CAP, HEXAGON HEAD: ROD END BEARING	EA	2
101	29	PA0ZZ	5315-781-6532	MS16562-161	96906	PIN, SPRING: RETURN SPRING	EA	1
101	30	PA0ZZ	5310-269-2809	MS90726-66	96906	SCREW, CAP, HEXAGON HEAD: CONTROL LEVER PLATE	EA	2
101	31	PA0ZZ		MS35388-4	96906	WASHER, LOCK: CONTROL LEVER PLATE	EA	2
102	1	PA0ZZ	5305-071-2066	MS90728-109	96906	SCREW, CAP, HEXAGON HEAD: PLATE MTG	EA	6
102	2	XB0ZZ		6774012	73342	PLATE, FLEXIBLE DISC	EA	1
102	5	PA0ZZ	5310-984-3807	MS51922-12	96906	NUT, SELF-LOCKING, HEXAGON: COVER MTG	EA	24
113	1	PA0ZZ	4730-834-5151	143938	73342	PLUG, PIPE: HOUSING	EA	1
113	2	PA0ZZ	4730-018-9566	444612	73342	PLUG, PIPE	EA	2

	(1) ILLUSTRATION (a) FIG NO.	(b) ITEM NO.	(2) SMR CODE	(3) FEDERAL STOCK NUMBER	(4) PART NUMBER	(5) FSCM	(6) DESCRIPTION USABLE ON CODE	(7) U/M	(8) QT INC IN UNI
C	113	11	PAOZZ	2520-133-9959	8351319	00000	BREATHER	EA	1
C	113	12	PCOZZ	5330-311-5189	6750265	73342	GASKET: COVER AND STRAINER (PART OF KIT, FSN 2520-876-8739)	EA	2
C	113	13	XBOZZ		6758337	73342	COVER: TRANSMISSION	EA	1
C	113	14	PAOZZ	5310-637-9541	MS35338-46	96906	WASHER, LOCK: COVER AND STRAINER	EA	12
C	113	15	PAOZZ	5305-269-3210	MS90725-59	96906	SCREW, CAP, HEXAGON HEAD: COVER AND STRAINER	EA	12
C	113	22	PAOZZ	3810-916-1932	444592	73342	PLUG, DRAIN	EA	1
C	113	23	PAOZZ	2520-080-6924	6777318	73342	STRAINER ASSEMBLY, OIL	EA	1

(1) ILLUSTRATION (a) FIG NO.	(b) ITEM NO.	(2) SMR CODE	(3) FEDERAL STOCK NUMBER	(4) PART NUMBER	(5) FSCM	(6) DESCRIPTION USABLE ON CODE	(7) U/M	(8) QTY INC IN UNIT
						GROUP 30 - PARKING BRAKE AND LEVER		
114	1	PAOZZ	2530-00-972-8356	6110C42-775	92867	LEVER ASSEMBLY, PARKING BRAKE	EA	1
114	2	PAOZZ	5310-00-010-3320	MS35338-7	96906	WASHER, LOCK: LEVER MTG	EA	1
114	3	PAOZZ	5310-00-012-0368	MS35690-525	96906	NUT, PLAIN, HEXAGON: LEVER MTG	EA	2
114	4	PAOZZ	5310-00-637-9541	MS35338-46	96906	WASHER, LOCK: LEVER MTG	EA	2
114	5	PAOZZ	5310-00-543-5973	MS35691-625	96906	NUT, PLAIN, HEXAGON: LEVER MTG	EA	2
114	6	PAOZZ	5315-00-236-8359	MS24665-370	96906	PIN, COTTER: ROD MTG	EA	3
114	7	PAOZZ	5315-00-010-3496	103496	00000	PIN, STRAIGHT, HEADED: ROD MTG	EA	2
114	8	XBOZZ	5340-00-351-0183	144243	24617	CLEVIS, ROD END: CONTROL ROD	EA	1
114	9	PAOZZ		MS35691-525	96906	NUT, PLAIN, HEXAGON: CONTROL ROD	EA	1
114	10	XBOZZ		3050433-6	92392	ROD, CONNECTING	EA	1
114	11	PAOZZ	5310-00-012-2236	122236	00000	NUT, PLAIN, HEXAGON: CLEVIS ADJUSTING	EA	1
114	12	XBOZZ	2990-00-414-6976	917664-5	92392	CLEVIS, ROD END: CONTROL ADJUSTING	EA	1
114	13	XBOZZ		3050351-0	92392	LEVER: CROSS SHAFT	EA	1
114	14	PAOZZ	5310-00-012-0368	MS35690-525	96906	NUT, PLAIN, HEXAGON: PILLOW BLOCK MTG	EA	4
114	15	PAOZZ	5310-00-010-3320	MS35338-7	96906	WASHER, LOCK: PILLOW BLOCK MTG	EA	4
114	16	XBOZZ		3048256-6	92392	HOUSING, BEARING UNIT, PILLOW BLOCK	EA	2
114	17	PAOZZ	5310-00-081-4219	MS27183-12	96906	WASHER, FLAT: PILLOW BLOCK MTG	EA	4
114	18	PAOZZ	5306-00-225-9089	MS90726-34	96906	BOLT, MACHINE: PILLOW BLOCK MTG	EA	4
114	19	XBOZZ		3050318-9	92392	ROD, CONNECTING	EA	1
114	20	PAOZZ	5310-00-720-8536	MS3561-725	96906	NUT, PLAIN, HEXAGON: CLEVIS ADJUSTING	EA	1
114	21	XBOZZ		917647-2	92392	CLEVIS, ROD END: CONNECTING ROD	EA	1
114	22	XBOZZ		917647-0	92392	PIN, STRAIGHT, HEADED: CLEVIS	EA	1
114	23	PAOZZ	5305-00-269-2808	MS90726-65	96906	SCREW, CAP, HEXAGON HEAD: LEVER MTG, 3/8-24 THD SIZE, 1 3/4 IN. LG	EA	1
114	24	PAOZZ	5306-00-225-9094	MS90726-39	96906	BOLT, MACHINE: LEVER MTG, 5/16-24 THD SIZE, 1 3/4 IN. LG	EA	1
						GROUP 31 - WHEEL AND TIRE		
116	1	XBOZZ	2530-00-412-1785	3051732-0-305172	92392	WHEEL ASSEMBLY	EA	4
116	2	PAOZZ	2640-00-060-3550	3051731-2	92392	CAP, VALVE	EA	4
116	3	PAOZZ	4730-00-111-2519	520904	00000	ADAPTER: VALVE TO CAP	EA	4
116	4	PAOZZ	2640-00-555-2827	MS51373-1	96906	VALVE ASSEMBLY	EA	4
116	5	PAOZZ	2530-00-111-6473	RA26561-2	73195	WHEEL	EA	4
116	6	PCOZZ	5330-00-972-8204	OR25T	73195	RING, SEAL	EA	4
116	7	PAOZZ	5340-00-110-5700	SR346TU5	73195	RING, SIDE	EA	4
116	8	PAOZZ	5340-00-110-5701	3038768-2	89926	RING, LOCK	EA	4
116		PAOZZ	2640-00-240-2062	6000	53477	CORE, VALVE	EA	4
116	9	PCOZZ	2610-00-726-5164			TIRE, PNEUMATIC, TUBELESS: 17.5 X 25, 12 PLY	EA	4
						GROUP 32 - BRAKE SYSTEM		
117	1	XBOZZ		3006769-8	92392	CLAMP, TUBE: BRAKE LINE	EA	6
117	2	PDAZZ	4710-00-115-0495	3052046-4	92392	TUBE: TEE TO POWER CLUSTER	EA	1

	(1) ILLUSTRATION (a) FIG NO.	(b) ITEM NO.	(2) SMR CODE	(3) FEDERAL STOCK NUMBER	(4) PART NUMBER	(5) FSCM	(6) DESCRIPTION USABLE ON CODE	(7) U/M	(8) QTY INC IN UNIT
C	117	3	PAOZZ	4730-00-287-1707	702X4	79470	TEE: BRAKE LINE	EA	1
C	117	4	PAOZZ	4710-00-168-1862	3050380-9	92392	TUBE ASSEMBLY: TEE TO CYLINDER	EA	1
C	117	5	MOOOO		3050362-7	92392	TUBE: POWER CLUSTER TO TREADLE VALVE MANUFACTURE FROM:	EA	1
	117		PCOZZ				TUBE, AS REQUIRED	RL	
	117		PAOZZ	4730-00-287-1543			NUT, 2 REQUIRED	EA	
	117		PAOZZ	4730-00-278-8767			SLEEVE, 2 REQUIRED	EA	
C	117	6	PAOZZ	4730-00-278-8886	919982-9	92392	UNION, PIPE: BRAKE LINE	EA	3
C	117	7	MOOOO		2050363-5	92392	TUBE: POWER CLUSTER TO TREADLE VALVE MANUFACTURE FROM:	EA	1
	117		PCOZZ	4710-00-278-5619			TUBE, AS REQUIRED	RL	
	117		PAOZZ	4730-00-278-8761			SLEEVE, 2 REQUIRED	EA	
	117		PAOZZ	4730-00-278-1543			NUT, 2 REQUIRED	EA	
C	117	8	PAOZZ	4730-00-278-3828	69X8	79470	ELBOW, PIPE: TUBE TO POWER CLUSTER	EA	2
	117	9	PAOZZ	4710-00-115-0494	3050379-1	92392	TUBE ASSEMBLY, POWER CLUSTER TO TEE	EA	1
	117	10	PAOZZ	5310-00-809-3076	MS27183-11	96906	WASHER, LOCK: TUBE CLAMP	EA	2
	117	11	PAOZZ	5310-00-656-0227	913177-2	92392	NUT, PLAIN, HEXAGON: TUBE CLAMP MTG	EA	2
	117	12	PAOZZ		2006797-7	92392	WASHER: INNER, FITTING	EA	2
	117	13	PAOZZ	4730-00-403-0885	3006806-8	92392	FITTING: HYDRAULIC LINE	EA	1
C	117	14	PAOZZ		3006799-5	92392	WASHER: OUTER, FITTING	EA	1
C	117	15	PAOZZ	4730-00-489-5799	3007115-3	92392	FITTING: HYDRAULIC FITTING BOLT	EA	1
	117	16	PAOHH	2530-00-133-9970	AC70128	17460	CLUSTER ASSEMBLY, POWER, FRONT	EA	1
	118	19	XBOZZ		FC18299	17460	PLUG: FILL	EA	1
	118	20	PAOZZ	5330-00-291-4645	FC5922	17460	GASKET: FILL PLUG	EA	1
C	119		PAOHH	2530-00-970-3444	8017004	19207	CLUSTER ASSEMBLY, POWER, REAR	EA	1
C	119	19	XBOZZ		FC18299	17460	PLUG, FILL	EA	1
C	119	20	PAOZZ	5330-00-291-4645	FC5922	17460	GASKET: FILL PLUG	EA	1
C	120	1	XBOZZ		3051719-7	92392	TUBE ASSEMBLY: AIR SUPPLY, REAR	EA	1
C	120	2	PAOZZ		68X4A	79470	CONNECTOR: AIR LINE	EA	2
C	120	3	PAOZZ	2530-00-115-0235	3031668-1	92392	SWITCH, PRESSURE	EA	1
C	120	4	PAOZZ	4730-00-284-2830	901825-0	92392	REDUCER, PIPE: SWITCH, 1/4 X 1/8 IN.	EA	2
C	120	5	PAOZZ	4730-00-278-7778	901714-6	92392	CROSS, PIPE: AIR LINES	EA	1
C	120	6	PAOZZ	4730-00-192-9450			NIPPLE, PIPE: AIR LINE, 1/4 x 1/4 X 7/8 IN.	EA	2
C	120	7	PAOZZ	4730-00-278-2745	105417	00000	TEE, PIPE, AIR LINE	EA	2
C	120	8	PAOZZ	4730-00-192-9450			NIPPLE, PIPE: AIR LINE, 1/4 X 1/4 X 7/8 IN.	EA	1
C	120	9	PAOZZ	4310-00-452-9304	221154	06853	VALVE, SAFETY	EA	1
C	120	10	PAOZZ	4730-00-278-3828	69X8	79470	ELBOW, PIPE: AIR LINE, 3/8 X 1/2 IN.	EA	1
C	120	11	PAOZZ	2530-00-115-0233	3050286-8	92392	RESERVOIR, AIR	EA	1
C	120	12	PAOZZ	4730-00-278-3828	69X8	79470	ELBOW, PIPE, AIR LINE, 3/8 X 1/2 IN.	EA	1
C	120	13	MOOOO		3050357-7	92392	TUBE: AIR LINE MANUFACTURE FROM:	EA	1
	120		PAOZZ	4730-00-278-8767			SLEEVE, 2 REQUIRED	EA	
	120		PAOZZ	4730-00-287-1543			NUT, 2 REQUIRED	EA	

(1) ILLUSTRATION (a) FIG NO.	(b) ITEM NO.	(2) SMR CODE	(3) NATIONAL STOCK NUMBER	(4) PART NUMBER	(5) FSCM	(6) DESCRIPTION USABLE ON CODE	(7) U/M	(8) QTY INC IN UNIT
120		PCOZZ	4710-00-278-5619			TUBING, AS REQUIRED	RL	
120	14	XBOZZ	5340-00-133-3660	3037049-8	92392	CLAMP: TANK MTG	EA	2
120	15	PAOZZ		MS20364-524A	96906	NUT, SELF-LOCKING, HEXAGON: CLAMP MTG, 5/16-24 THD SIZE	EA	2
120	16	PAOZZ		MS15795-12	96906	WASHER, FLAT: CLAMP MTG, 5/16 IN. DIA	EA	8
120	17	PAOZZ	5310-00-012-0368	MS35690-525	96906	NUT, PLAIN, HEXAGON: CLAMP MTG, 5/16-24 THD SIZE	EA	6
120	18	PAOZZ	5310-00-010-3320	MS35338-7	96906	WASHER, LOCK: CLAMP MTG, 5/16 IN. DIA	EA	6
120	19	PAOZZ	5306-00-225-9034	MS90726-39	96906	SCREW, CAP, HEXAGON HEAD: CLAMP MTG, 5/16-24 THD SIZE, 1 3/4 IN. LG	EA	2
120	20	XBOZZ		3048511-5	92392	CLAMP: AIR LINE	EA	1
120	21	MOOOO		3050356-9	92392	TUBE: AIR LINE MANUFACTURE FROM:	EA	1
120		PAOZZ	4730-00-278-8767			SLEEVE, 2 REQUIRED	EA	
120		PAOZZ	4730-00-287-1543			NUT, 2 REQUIRED	EA	
120		PCOZZ	4710-00-277-5529			TUBING, AS REQUIRED	RL	
120	22	PAOZZ	5306-00-225-9097	MS90726-42	96906	SCREW, CAP, HEXAGON HEAD: CLAMP MTG, 5/16-24 THD SIZE, 2 1/2 IN. LG	EA	2
120	23	PAOZZ	5306-00-225-9089	MS90726-34	96906	SCREW, CAP, HEXAGON HEAD: CLAMP MTG, 5/16-24 THD SIZE, 1 IN. LG	EA	4
120	24	PAOZZ	4730-00-278-3828	69X8	79470	ELBOW, PIPE: AIR LINE	EA	1
120	25	MOOOO		3050355-1	92392	TUBE: AIR LINE MANUFACTURE FROM:	EA	1
120		PAOZZ	4730-00-278-8767			SLEEVE, 2 REQUIRED	EA	
120		PAOZZ	4730-00-287-1543			NUT, 2 REQUIRED	EA	
120		PCOZZ	4710-00-277-5529			TUBING, AS REQUIRED	RL	
120	26	PAOZZ	4730-00-278-3828	69X8	79470	ELBOW, PIPE: AIR LINE	EA	2
120	27	PAOZZ	4820-00-133-9974	AC23540	63477	VALVE, CHECK	EA	2
120	28	PAOZZ		444171	00000	ELBOW, STREET PIPE TO LINE	EA	2
120	29	PAOZZ		914087-2	92392	TEE, PIPE: AIR LINE	EA	1
120	30	PAOZZ	4730-00-595-2628	68X8A	79470	CONNECTOR: AIR LINE	EA	2
120	31	PAOZZ		919503-3	92392	CONNECTOR: AIR LINE	EA	2
120	32	MOOOO		3050354-4	92392	TUBE: AIR LINE MANUFACTURE FROM:	EA	1
120		PAOZZ	4730-00-278-8767			SLEEVE, 2 REQUIRED	EA	
120		PAOZZ	4730-00-287-1543			NUT, 2 REQUIRED	EA	
120		PCOZZ	4710-00-277-5529			TUBING, AS REQUIRED	RL	
120	33	PAOZZ	4820-00-142-3036	215310	92392	COCK, DRAIN: AIR RECEIVER	EA	3
120	34	PAOZZ	4730-00-277-8266	69X4A	79470	ELBOW, PIPE: TEE TO AIR	EA	3
120	35	PCOZZ	4720-00-114-0986	73050972	25424	HOSE, SPECIAL: TANK TO SUPPLY VALVE	EA	1
120	36	PAOZZ		68X4A	79470	CONNECTOR, TUBE: AIR LINE, 1/4 IN.	EA	1
120	37	PAOZZ	2530-00-691-1233	224296	06853	VALVE, AIR SUPPLY	EA	1
120	38	PAOZZ	5305-00-267-8974	MS90726-8	96906	SCREW, CAP, HEXAGON HEAD: VALVE MTG, 1/4-28 THD SIZE, 1 IN. LG	EA	2
120	39	PCOZZ	4720-00-115-0234	3050973-1	92392	HOSE ASSEMBLY, GOVERNOR TO AIR SUPPLY VALVE	EA	1
120	40	XBOZZ	5340-00-720-6213	TC16	75272	CLAMP, LOOP: AIR LINE	EA	1
120	41	PCOZZ	4720-00-114-0987	3050295-9	92392	HOSE ASSEMBLY, TANK TO COMPRESSOR	EA	1

	(1) ILLUSTRATION (a) FIG NO.	(b) ITEM NO.	(2) SMR CODE	(3) FEDERAL STOCK NUMBER	(4) PART NUMBER	(5) FSCM	(6) DESCRIPTION USABLE ON CODE	(7) U/M	(8) QTY INC IN UNIT
C	120	42	PAOZZ		MS35337-25	96906	WASHER, LOCK: VALVE MTG, 1/4 IN. DIA	EA	2
C	120	43	PAOZZ	5310-012-0367	MS35690-425	96906	NUT, PLAIN, HEXAGON: VALVE MTG, 1/4-28 THD SIZE	EA	2
C	120	44	PAOZZ		675X185	06853	CHECK VALVE: AIR LINE	EA	1
C	120	45	PAOZZ		917391-5	92392	TEE, PIPE: AIR LINE	EA	1
C	120	46	PAOZZ	4730-196-1465	8743067	00000	NIPPLE, PIPE: AIR LINE	EA	1
C	120	47	PAOZZ	4730-279-0137	5141	76894	BUSHING, REDUCER: AIR LINE, 1/2 X 1/8 IN.	EA	1
C	121	1	PAOZZ	4710-115-0503	3051025-9	92392	TUBE: AIR LINE	EA	1
C	121	2	PAOZZ	4710-408-4593	3053227-1	92392	TUBE: AIR LINE	EA	1
C	121	3	PAOZZ	4730-263-4976	69X2	79470	ELBOW, PIPE: TUBE TO VALVE	EA	1
C	121	4	PAOZZ	5310-012-0367	MS35690-425	96906	NUT, PLAIN, HEXAGON: ALCOHOL DISPENSER MTG, 1/4-28 THD SIZE	EA	3
C	121	5	PAOZZ	5310-010-3319	MS35338-6	96906	WASHER, LOCK: ALCOHOL DISPENSER MTG, 1/4 IN. ID	EA	3
C	121	6	PAOZZ	5305-267-8977	MS90726-10	96906	SCREW, CAP, HEXAGON HEAD: ALCOHOL DISPENSER MTG, 1/4-28 THD SIZE, 1 1/4 IN. LG	EA	3
C	121	7	PAOZZ	2530-133-9971	3051030-9	92392	EVAPORATOR, ALCOHOL	EA	1
C	122	1	PAOZZ	4710-143-8993	3042839-5	92392	TUBE ASSEMBLY: FRONT BRAKE, RIGHT SIDE	EA	1
C	122	2	PAOZZ		3042836-1	92392	TUBE ASSEMBLY: FRONT BRAKE, TEE TO UNION	EA	1
	122	3	PCOZZ	4720-115-0497	3043197-7	92392	HOSE ASSEMBLY: TO BRAKE, TUBE	EA	1
N	122	4	PAOZZ	4710-115-0496	3050814-7	92392	TUBE ASSEMBLY: HOSE TO TEE	EA	1
C	122	5	PAOZZ		3045907-7	92392	TUBE ASSEMBLY: TO RIGHT HAND WHEEL CYLINDER, REAR	EA	1
C	122	6	PAOZZ		3045908-5	92392	HOSE ASSEMBLY, TUBE TO TEE, REAR AXLE	EA	1
C	122	7	PAOZZ	4730-207-1707	922248-0	92392	TEE, TUBE: AXLE BRAKE LINES	EA	2
C	122	8	PAOZZ	4710-143-8992	3045906-9	92392	TUBE ASSEMBLY: TEE TO LEFT WHEEL CYLINDER, REAR	EA	1
C	122	9	PAOZZ	4710-115-0499	3050376-7	92392	TUBE ASSEMBLY: ELBOW TO CLUTCH CUTOFF VALVE	EA	1
C	122	10	PAOZZ	4710-115-0501	3050377-5	92392	TUBE ASSEMBLY: CONNECTOR TO CUTOFF VALVE	EA	2
C	122	11	PAOZZ	4730-217-8273	47M14X1-8	30327	ELBOW, TUBE: TUBE TO TUBE	EA	2
C	122	12	PAOZZ	4710-115-0502	3050378-3	92392	TUBE ASSEMBLY: ELBOW TO TRANSMISSION	EA	1
C	122	13	PAOZZ	4710-143-8991	3042838-7	92392	TUBE ASSEMBLY: FRONT BRAKE, LEFT SIDE	EA	1
N	122	14	XBOZZ		3041159-6	92392	BRACKET	EA	1
N	122	15	XBOZZ		3028787-4	92392	CLIP, TUBE	EA	2
	122		PAOZZ		3050815	92392	TUBE ASSEMBLY: TEE TO HOSE	EA	1
C	124	1	PAOZZ	5305-269-2801	MS90726-58	96906	SCREW, CAP, HEXAGON HEAD: PEDAL TO ROD, 3/8-24 THD SIZE, 3/4 IN. LG	EA	4
C	124	2	PAOZZ	5310-637-9541	MS35338-46	96906	WASHER, LOCK: PEDAL TO ROD	EA	4
C	124	3	PAOZZ	5310-543-5973	MS35691-625	96906	NUT, PLAIN, HEXAGON: PEDAL TO ROD, 3/8-24 THD SIZE	EA	4
C	124	4	XBOZZ	2530-233-7799	3050399-9	92392	ROD: PEDAL CONNECTING	EA	1
C	124	5	PAOZZ	5306-225-9089	MS90726-34	96906	SCREW, CAP, HEXAGON HEAD: FLANGE MTG, 5/16-24 THD SIZE, 1 IN. LG	EA	3
C	124	6	PAOZZ	5310-010-3320	MS35338-7	96906	WASHER, LOCK: FLANGE MTG, 5/16 IN.	EA	3
C	124	7	PAOZZ	5310-012-0368	MS35690-525	96906	NUT, PLAIN, HEXAGON: FLANGE MTG, 5/16-24 THD SIZE	EA	3
C	124	8	XBOZZ	2530-189-4962	3047506-5	92392	PEDAL ASSEMBLY: TREADLE VALVE CONNECTING	EA	1
C	124	9	XAOZZ		AC421171	63477	FLANGE	EA	1
C	124	10	PAOZZ	5315-115-1488	AC31768	63477	PIN, STRAIGHT, HEADLESS: PEDAL MTG	EA	2

(1) ILLUSTRATION (a) FIG NO.	(b) ITEM NO.	(2) SMR CODE	(3) FEDERAL STOCK NUMBER	(4) PART NUMBER	(5) FSCM	(6) DESCRIPTION USABLE ON CODE	(7) U/M	(8) QTY INC IN UNIT
24	12	XBOZZ		AD48382	63477	PEDAL, CONTROL	EA	1
25		PAOHH		3047507-3	92392	VALVE ASSEMBLY, AIR APPLICATION	EA	1
25	15	XBOZZ		AD48382	63477	PEDAL, CONTROL	EA	1
25	16	XBOZZ		AC31768	63477	PIN, STRAIGHT, HEADLESS: PEDAL MTG	EA	2
25	17	XBOZZ	2530-00-115-0237	AC42170	63477	ROLLER	EA	1
25	18	PAOZZ	5315-00-236-8353	MS24665-306	96906	PIN, COTTER: PEDAL MTG	EA	4
		PAOZZ	5930-00-126-1159	229848	06853	SWITCH, STOP LIGHT	EA	1
		PAOZZ		11083-8X1-4	30327	BUSHING, PIPE: STOP LIGHT SWITCH	EA	1
						GROUP 33 - FRONT AND REAR AXLE		
32	1	PAOZZ	4730-00-044-4655	444655	24617	PLUG, PIPE: PLANETARY COVER	EA	2
32	14	PAOZZ	5310-00-594-8038	537801	00000	NUT, HEXAGON: WHEEL STUD, RH, 3/4-16 THD SIZE	EA	24
32	17	PAOZZ	4730-00-111-2513	1250Z182A	78500	PLUG, PIPE, MAGNETIC: PLANETARY	EA	2
34	2	PAOZZ	2520-00-110-9602	A1898F1072	79780	BREATHER: FRONT AXLE	EA	1
34	9	PAOZZ	4730-00-014-3985	143985	24617	PLUG, PIPE: OIL FILTER	EA	1
34		PAOZZ	4730-00-111-2511	1250C263	79780	PLUG	EA	1
35	3	PAOZZ	4730-00-053-0266	635380	00000	ELBOW, PIPE: LUBE HOSE	EA	2
35	4	PAOZZ	4710-00-111-2515	3032350-5	92392	TUBE ASSEMBLY, LUBE	EA	1
35	5	PAOZZ		3019807-1	92392	TUBE ASSEMBLY, LUBE	EA	1
35	8	PAOZZ	5310-00-010-3325	MS35338-12	96906	WASHER, LOCK: LUBE TUBE	EA	2
35	9	PAOZZ	5310-00-637-0244	229778	77445	NUT, PLAIN, HEXAGON: LUBE TUBE	EA	2
35	10	PAOZZ	4730-00-050-4208	MS15003-1	96906	FITTING, LUBRICATION: SUPPORT	EA	2
36	1	PAOZZ	4730-00-044-4655	444655	24617	PLUG, PIPE: PLANETARY COVER	EA	2
36	15	PAOZZ	5310-00-594-8038	537803	00000	NUT, HEXAGON: WHEEL STUD	EA	24
36	18	PAOZZ	4730-00-111-2513	1250Z182A	79780	PLUG, PIPE, MAGNETIC: PLANETARY	EA	2
38	5	PAOZZ	4730-00-014-3985	143985	24617	PLUG, PIPE: FILLER	EA	1
38	6	PAOZZ	2520-00-110-9602	A1898F1072	79780	BREATHER ASSEMBLY	EA	1
38	7	PAOZZ	4730-00-111-2511	1250C263	79780	PLUG, PIPE: DRAIN	EA	1
						GROUP 34 - MAIN FRAME		
39		PAOFF	2540-00-776-0103	7760103	00000	PINTLE ASSEMBLY	EA	1
39	1	PAOZZ		125438	00000	NUT, SLOTTED, HEXAGON: PINTLE MTG	EA	1
39	2	PAOZZ	5310-00-984-8818	MS15795-31	96906	WASHER, FLAT: PINTLE, 1 1/2 IN.	EA	1
39	3	XAOZZ		7760104	00000	PINTLE	EA	1
39	4	PAOZZ		7044253	00000	SPRING, PINTLE LATCH	EA	1
39	5	PAOZZ	5310-00-050-3520	503520	00000	NUT, SLOTTED, HEXAGON: LATCH BOLT	EA	1
39	6	PAOZZ	5315-00-298-1499	MS24665-360	96906	PIN, COTTER: LATCH BOLT	EA	1
39	7	XAOZZ	5340-00-704-9603	7049603	00000	LOCK, PINTLE	EA	1
39	8	XAOZZ	2540-00-771-4880	7049602	00000	LATCH, PINTLE	EA	1
39	9	XAOZZ		7714881	00000	PIN, LATCH	EA	1
39	10	PAOZZ	4730-00-050-4203	MS15001-1	96909	FITTING, LUBRICATION: PINTLE LATCH	EA	2
39	11	XAOZZ		8668096	00000	BOLT, MACHINE: LATCH	EA	1
39	12	XAOZZ	4010-00-129-3221	42C15120205	00000	CHAIN	EA	1
39	13	PAOZZ	5315-00-059-0219	590219	00000	PIN, COTTER: CHAIN	EA	1
39	14	PAOZZ	5315-00-849-5582	MS24665-502	96906	PIN, COTTER: PINTLE NUT, 7/16 X 3 IN.	EA	1

(1) ILLUSTRATION (a) FIG NO.	(b) ITEM NO.	(2) SMR CODE	(3) FEDERAL STOCK NUMBER	(4) PART NUMBER	(5) FSCM	(6) DESCRIPTION USABLE ON CODE
140	12	PAOZZ	4730-00-050-4208	MS15003-1	96906	FITTING, LUBRICAION: PIVOT PIN
		PAOZZ	5310-00-010-3319	MS35338-6	96906	WARMER, LOCK: FIRE EXTINGUISHER
		PAOZZ		901310-3	92392	NUT, PLAIN, HEXAGON: FIRE EXTINGUISHER MTG
		PAOZZ	4210-00-889-2221			EXTINGUISHER, FIRE
		XBOZZ		3052109-0	92392	PLATE, INSTRUCTION: ENGINE AND TRANSMISSION
		XBOZZ		3051182-8	92392	PLATE, IDENTIFICATION: ENGINE TEMPERATURE
		XBOZZ		3051714-8	92392	PLATE, IDENTIFICATION: AUXILIARY FIELD LIGHT SWITCH
		XBOZZ		3051957-3	92392	PLATE, INSTRUCTION: AUXILIARY FIELD LIGHT OFF-ON
		XBOZZ		3051969-8	92392	PLATE, IDENTIFICATION: VEHICLE LIGHT SWITCH
		XBOZZ		3051713-0	92392	PLATE, IDENTIFICATION: MAIN FIELD LIGHT SWITCH
		XBOZZ		3052004-3	92392	PLATE, IDENTIFICATION: CONVERTER TEMPERATURE WARNING LIGHT
		XBOZZ		2051708-0	92392	PLATE, IDENTIFICATION: TRANSMISSION OIL PRESSURE GAGE
		XBOZZ		925465-7	92392	RIVET, DRIVE: PLATE MTG
		PAOZZ	5305-00-984-6211	901173-5	92392	SCREW, ROUNDHEAD, MOUNTING FIRE EXTINGUISHER
		XBOZZ		3052129-8	92392	PLATE, INSTRUCTION: HYDRAULIC OIL FILTER
		XBOZZ		3052173-6	92392	PLATE, INSTRUCTION: LUBRICATION
		XBOZZ		3051721-3	92392	PLATE, INSTRUCTION: LUBRICATION EJECTION
		XBOZZ		925784-1	92392	RIVET, DRIVE: INSTRUCTION PLATE
		XBOZZ		3051715-5	92392	PLATE, IDENTIFICATION: HOUR METER
		XBOZZ		925465-7	92392	RIVET, DRIVE, PLATE MTG
		XBOZZ		3052011-8	92392	PLATE, IDENTIFICATION: PARKING BRAKE WARNING LIGHT
		XBOZZ		3051967-2	92392	PLATE, IDENTIFICATION: HORN BUTTON
		XBOZZ		3051710-6	92392	PLATE, IDENTIFICATION: AMMETER
		XBOZZ		3051707-2	92392	PLATE, IDENTIFICATION: BRAKE AIR PRESSURE GAGE
		XBOZZ		3052115-7	92392	PLATE, INSTRUCTION: START PROCEDURE
		XBOZZ		3051711-4	92392	PLATE, IDENTIFICATION: CONVERTER TEMPERATURE GAGE
		XBOZZ		3052012-6	92392	PLATE, INSTRUCTION: IGNITION OFF-ON
		XBOZZ		3051743-7	92392	PLATE, INSTRUCTION: TRANSMISSION CONTROL
		XBOZZ		3052108-2	92392	PLATE, INSTRUCTION: BOOM AND BUCKET CONTROL
		XBOZZ		3052100-9	92392	PLATE, INSTRUCTION: COLD WEATHER START
		XBOZZ		3052114-0	92392	PLATE, INSTRUCTION: CLUTCH RELEASE CONTROL
		XBOZZ		3052124-9	92392	PLATE, INSTRUCTION: AIR CLEANER INDICATION
		XBOZZ		3052144-7	92392	PLATE, INSTRUCTION: TRANSPORTATION DATA
		XBOZZ		3052128-0	92392	PLATE, IDENTIFICATION: VEHICLE
		XBOZZ		3052143-9	92392	PLATE, INSTRUCTION: OIL CHECK
						GROUP 35 - BULK MATERIAL
		PCOZZ	2940-00-603-4555			HOSE
		PAOZZ	4710-00-277-5529			TUBE, COPPER
		PAOZZ	4710-00-278-5619			TUBE, COPPER
		PCOZZ	4720-00-113-5484	FC107-10	01276	HOSE
		PCOZZ	4720-00-639-9899			HOSE
		PCOZZ	4720-00-824-4373			HOSE

(1) ILLUSTRATION (a) FIG NO.	(b) ITEM NO.	(2) SMR CODE	(3) FEDERAL STOCK NUMBER	(4) PART NUMBER	(5) FSCM	(6) DESCRIPTION USABLE ON CODE	(7) U/M	(8) QTY INC IN UNIT
		PC0ZZ	4720-930-4509			HOSE	RL	
		PC0ZZ	4720-930-4515			HOSE	FT	
		PC0ZZ	4720-930-5389			HOSE	RL	
		PC0ZZ		FC107-12	01276	HOSE	FT	

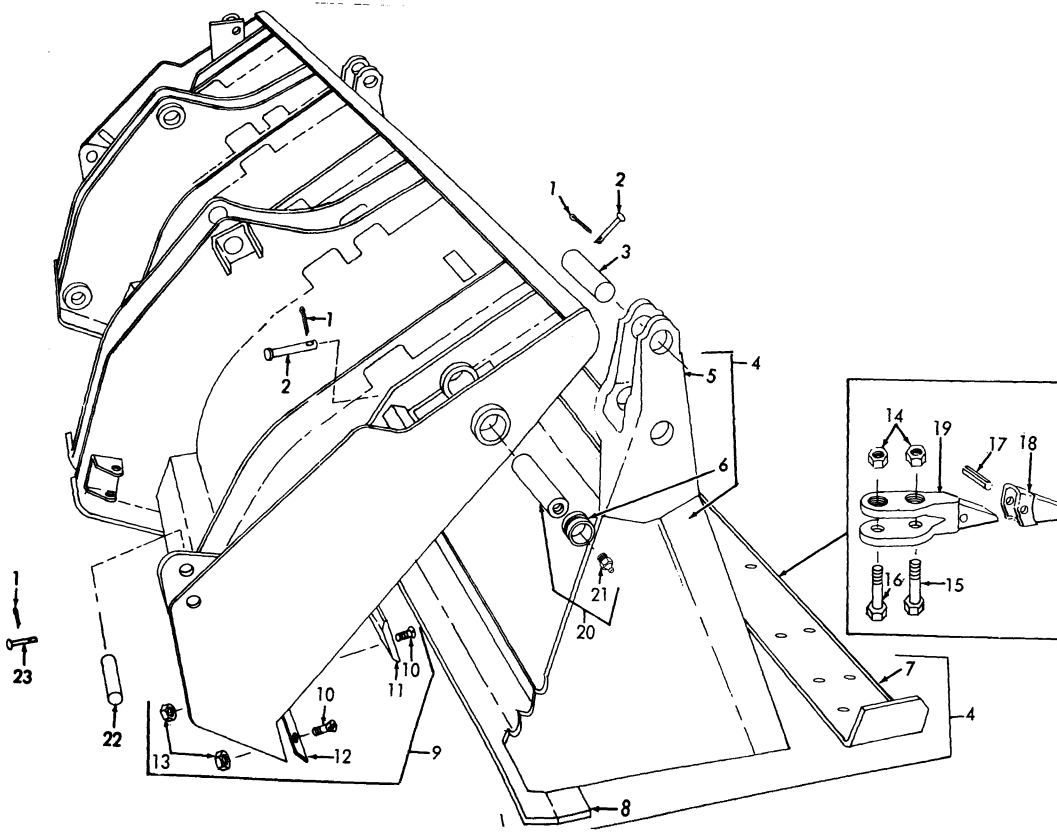
1
2
3
4
5
6
7
8
9
10
11
12
13
14
15
16
17
18
19
20
21
22
23

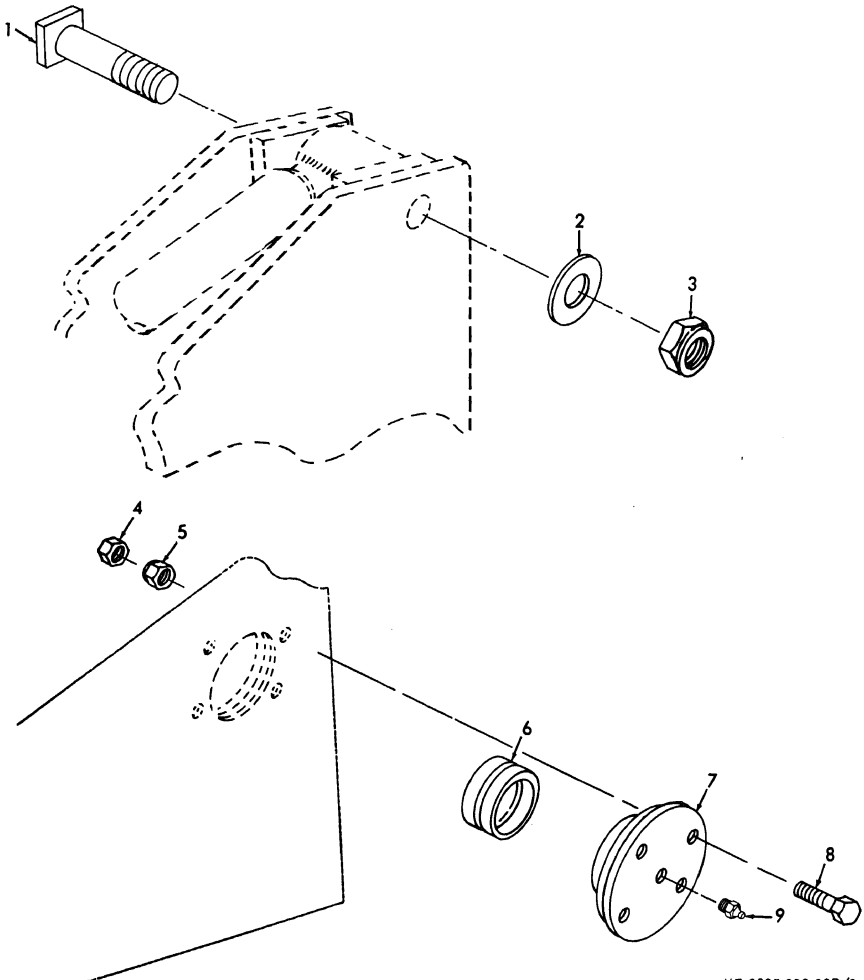

Figure 2. Pivot Pin and Bearing Retainer

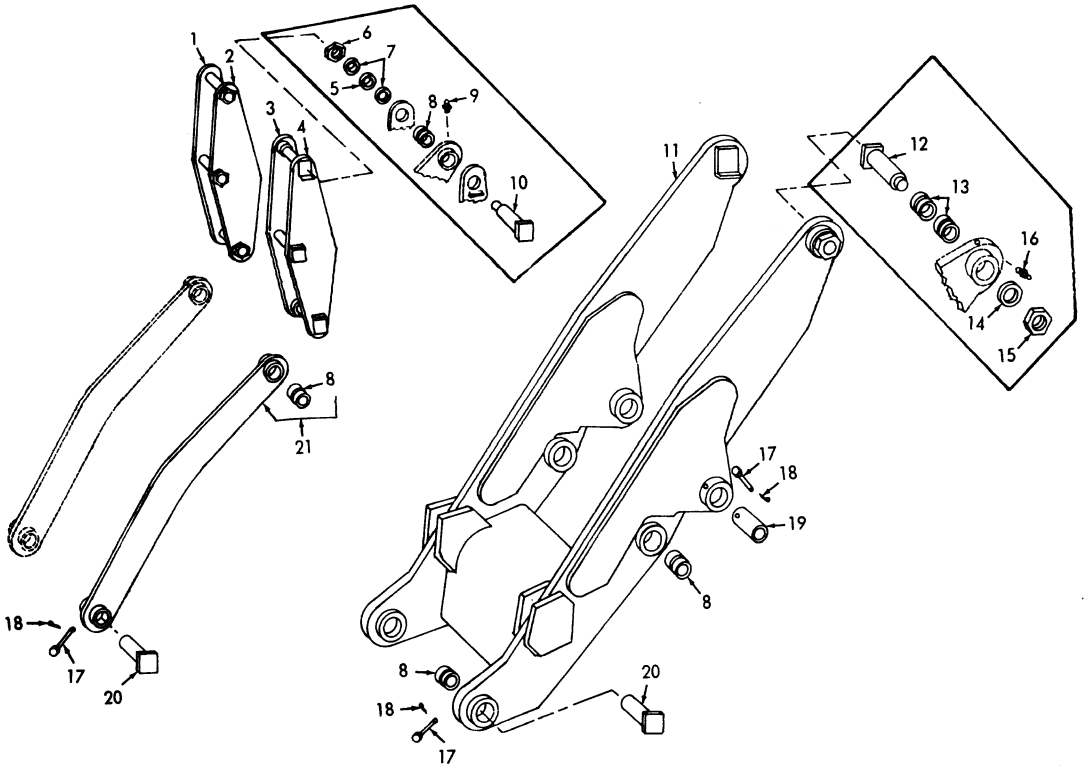
1
2
3
4
5
6
7
8
9
10
11
12
13
14
15
16
17
18
19
20
21

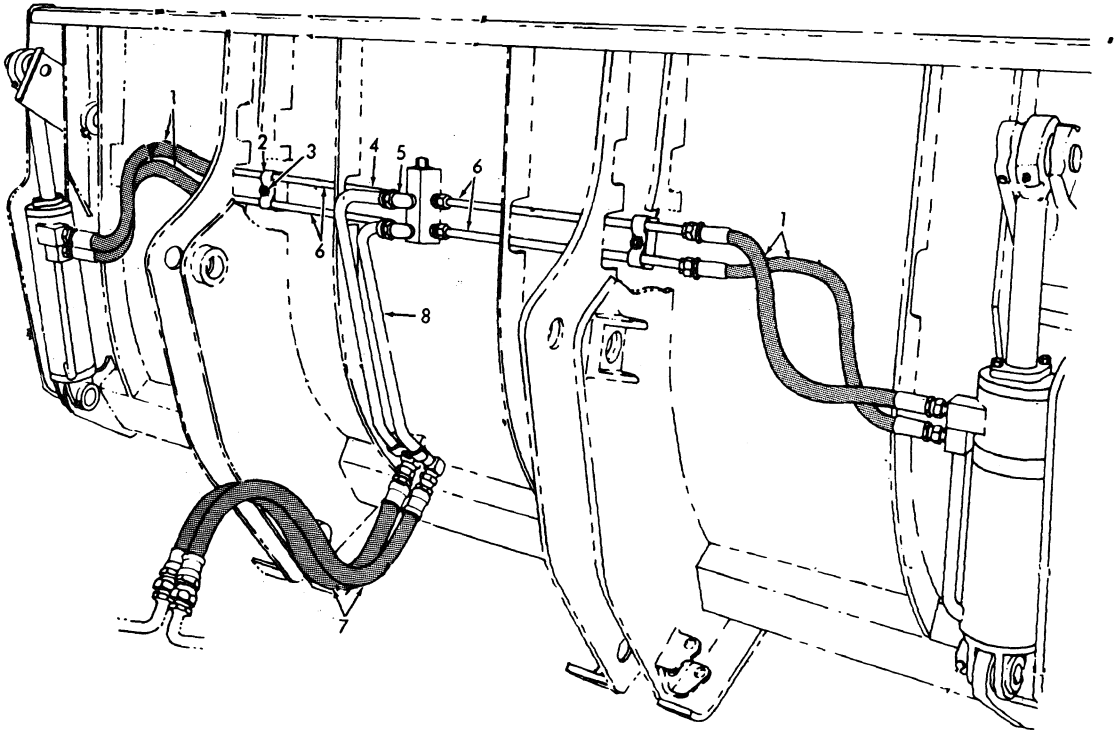

ME 3805-239-20P/4

Figure 4. Bucket Hydraulic Lines

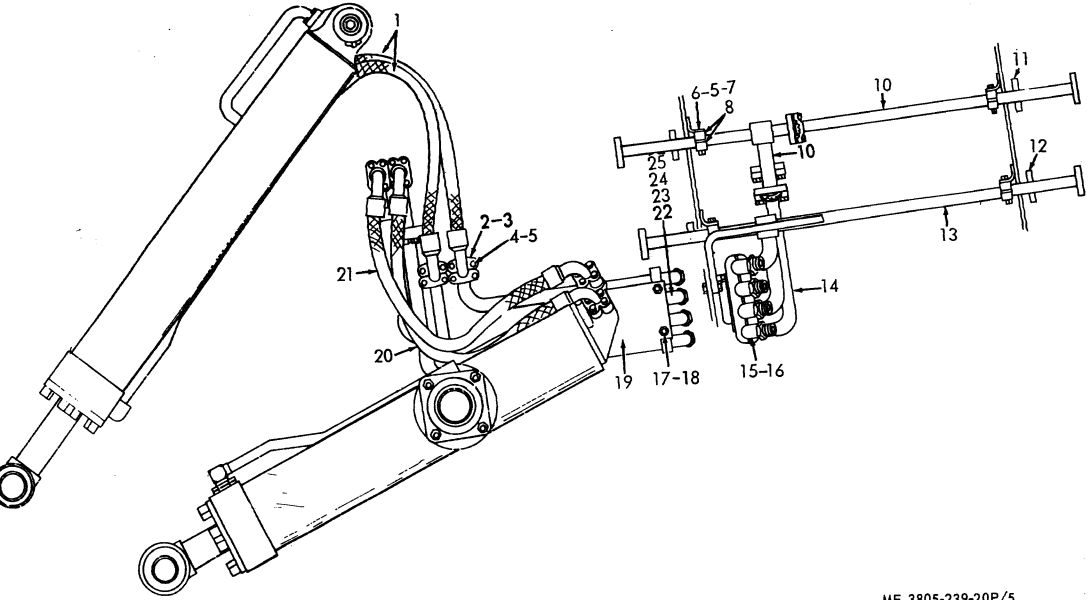

ME 3805-239-20P/5

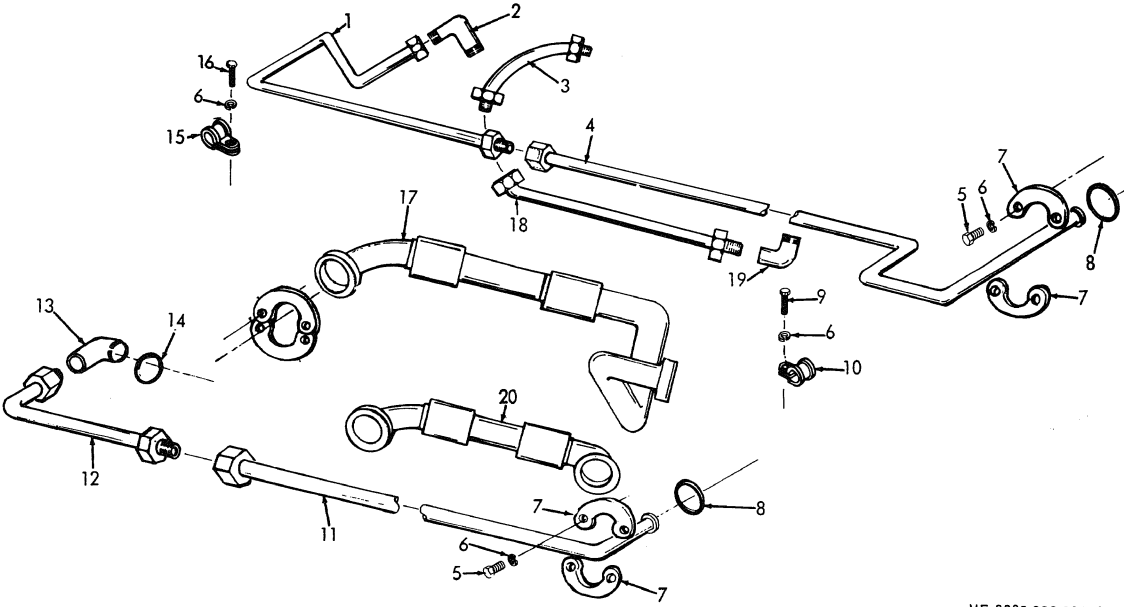

Figure 6. Hydraulic Lines

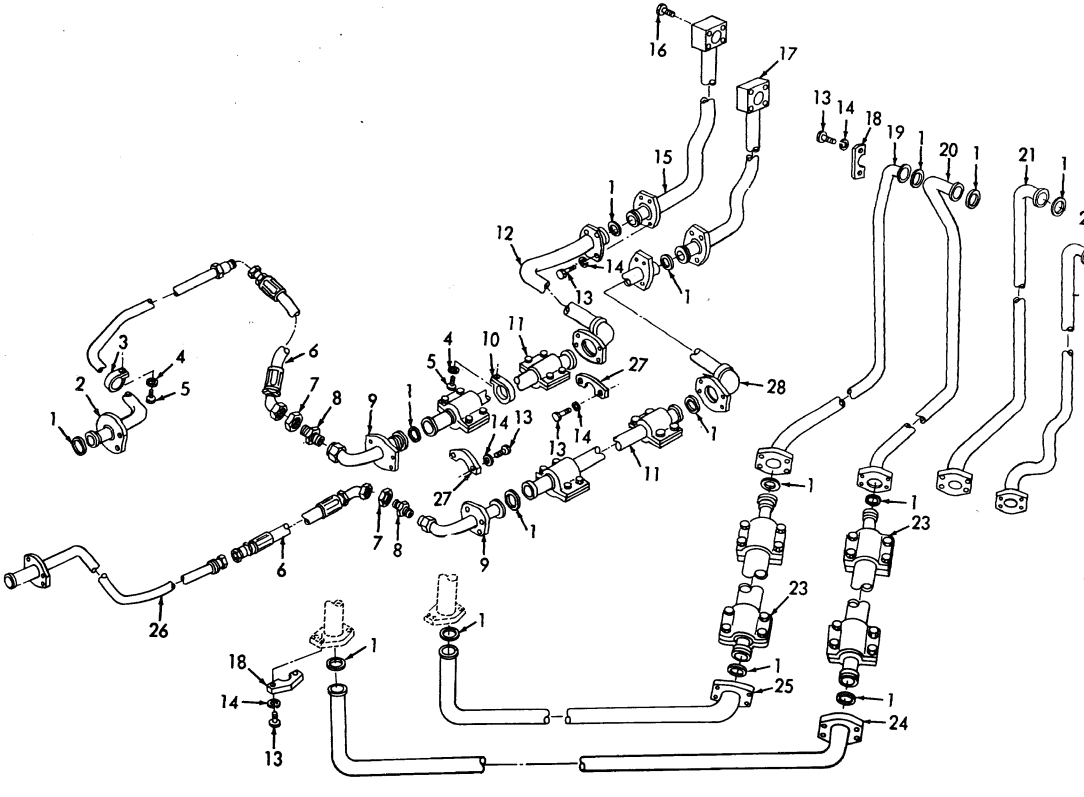

Figure 7. Valve to Cross Frame Hydraulic Lines

ME 3805-239-20P/7

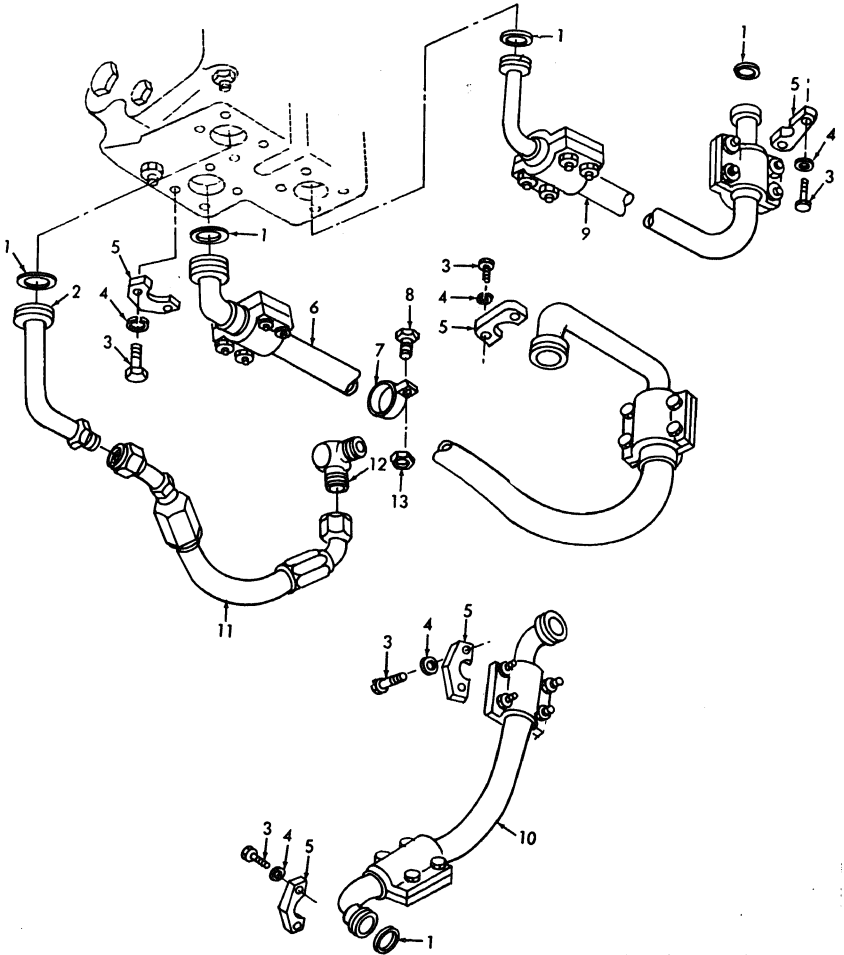

Figure 8. Demand and Control Valve, Hydraulic Lines

ME 3805-239-20P/8

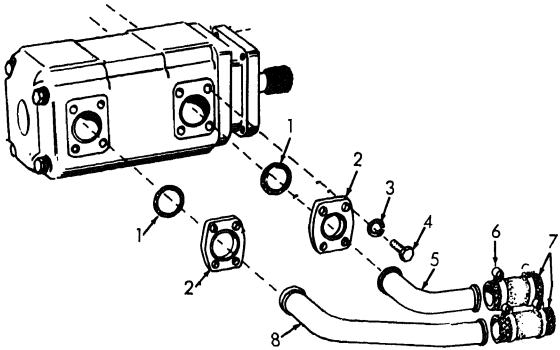

ME 3805-239-20 P/9

Figure 9. Hydraulic Pump Lines

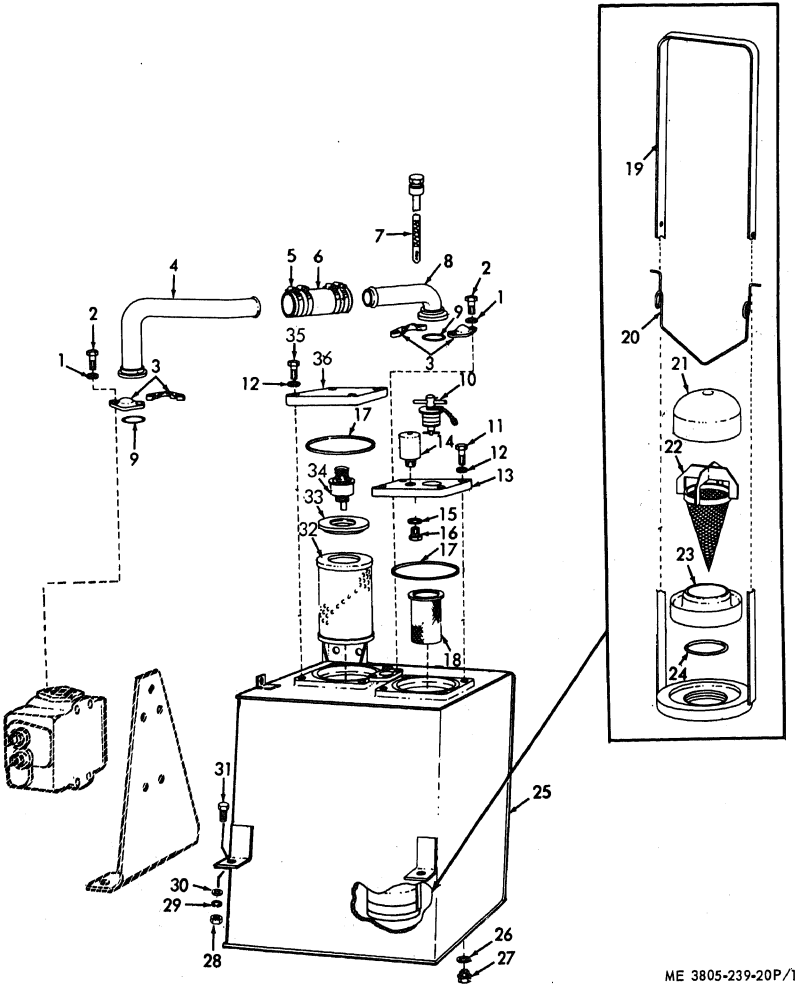

Figure 10. Hydraulic Tank and Lines

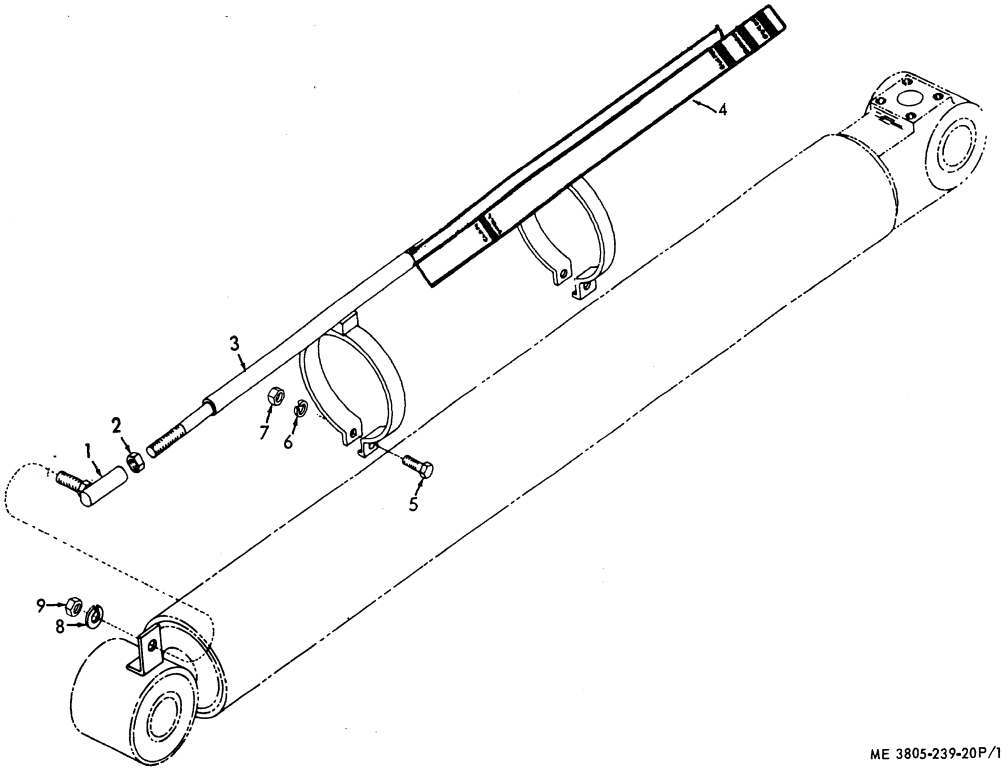

ME 3805-239-20P/11

Figure 11. Lift Cylinder Indicator

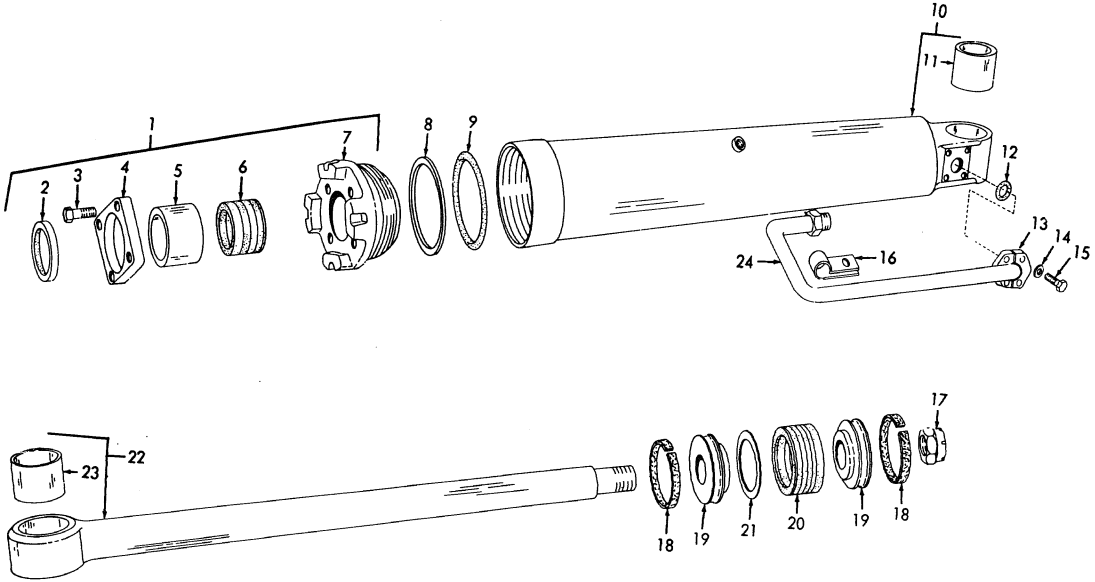

ME 3805-239-20P/12

Figure 12. Dump Cylinder

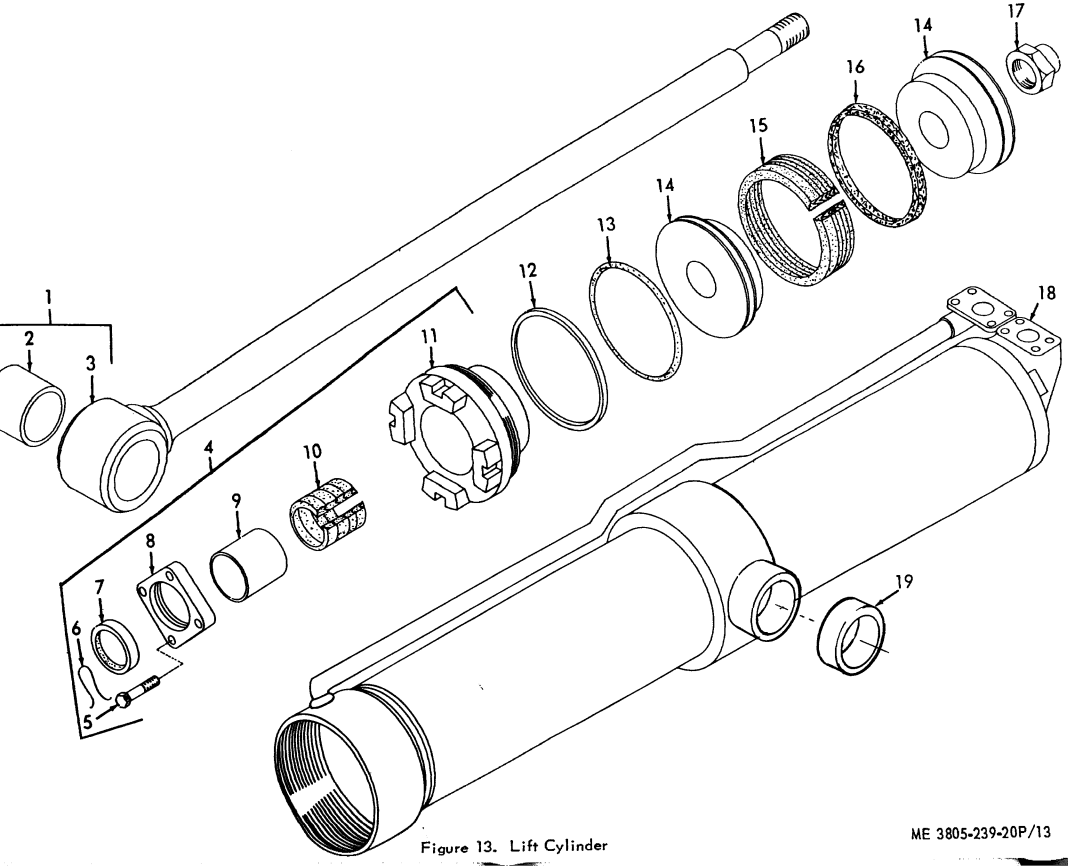

Figure 13. Lift Cylinder

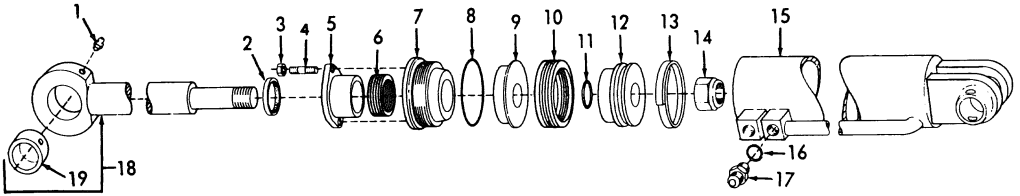

ME 3805-239-20P/14

Figure 14. Clam Cylinder

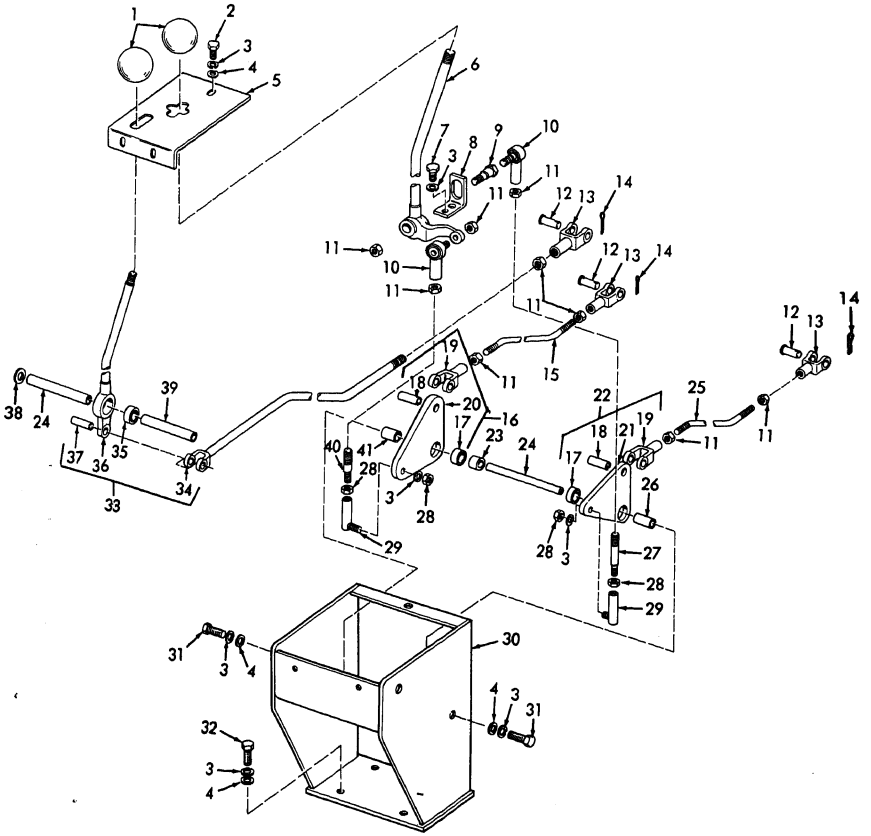

Figure 15. Hydraulic Controls

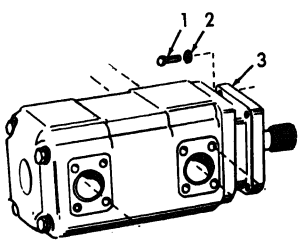

ME 3805-239-20P/21

Figure 21. Hydraulic Pump and Mounting Hardware

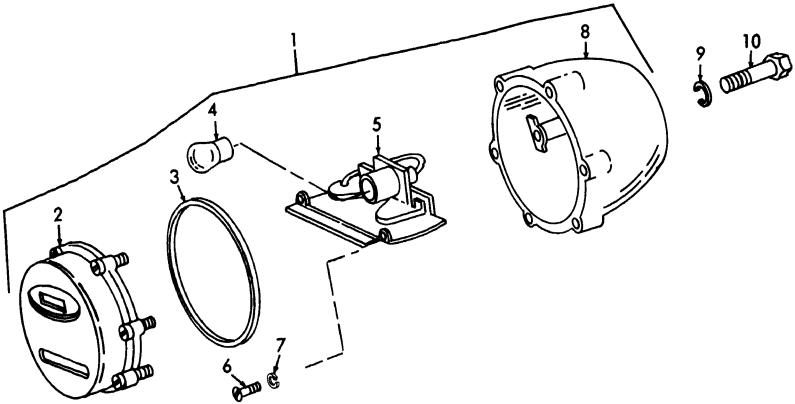

ME 380 5-239-20 P/23

Figure 23. Blackout Taillight

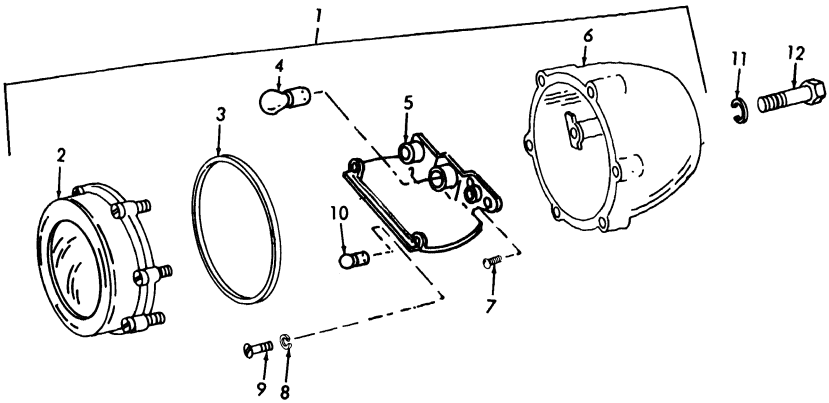

ME 3805-239-20P/24

Figure 24. Stop and Taillight

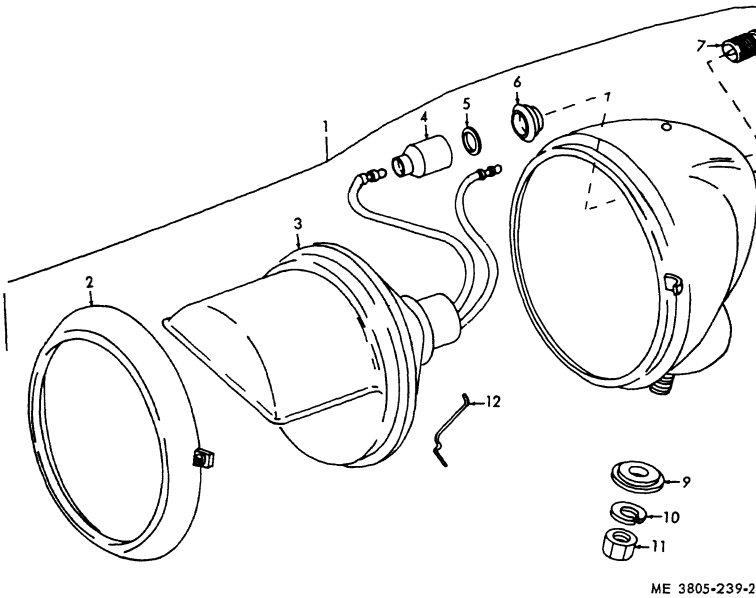

Figure 25. Blackout Light

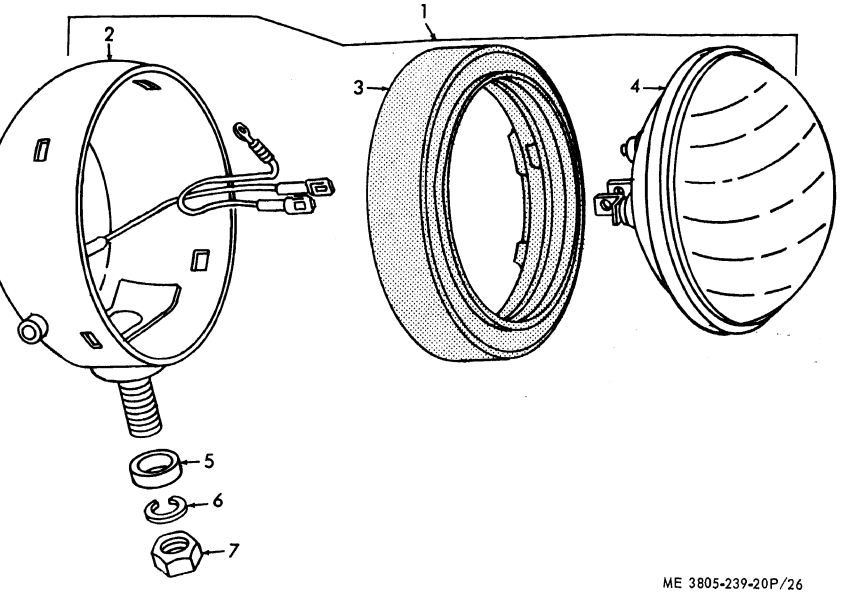

Figure 26. Headlight and Taillight

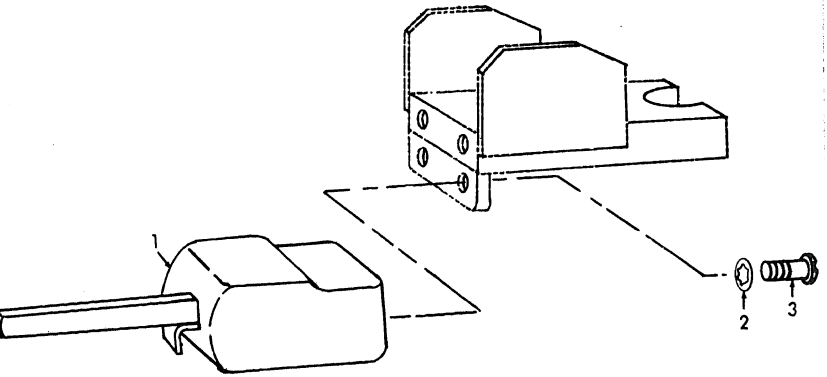

ME 3805-239-20P/27

Figure 27. Turn Signal Switch

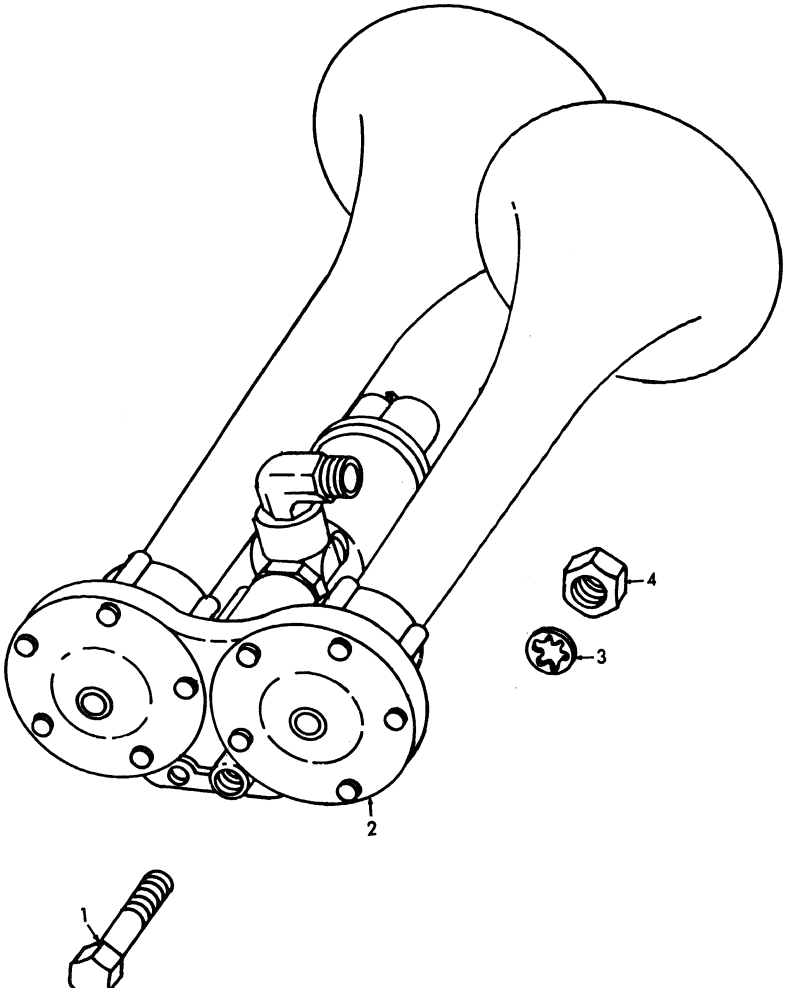

ME 3805-239-20P/28

Figure 28. Horn

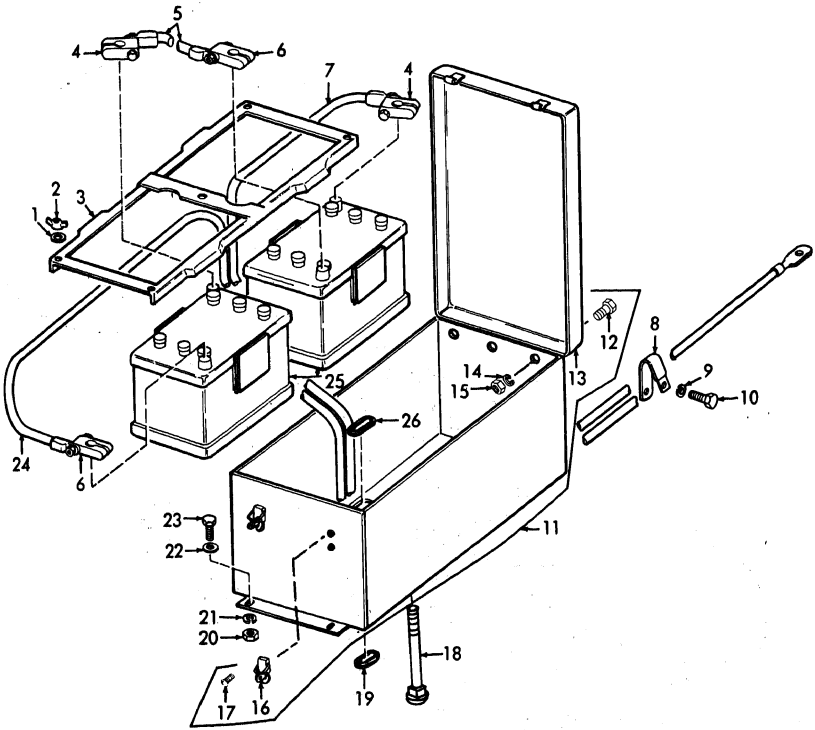

ME 3805-239-20P/29

Figure 29. Batteries, Cables, and Box

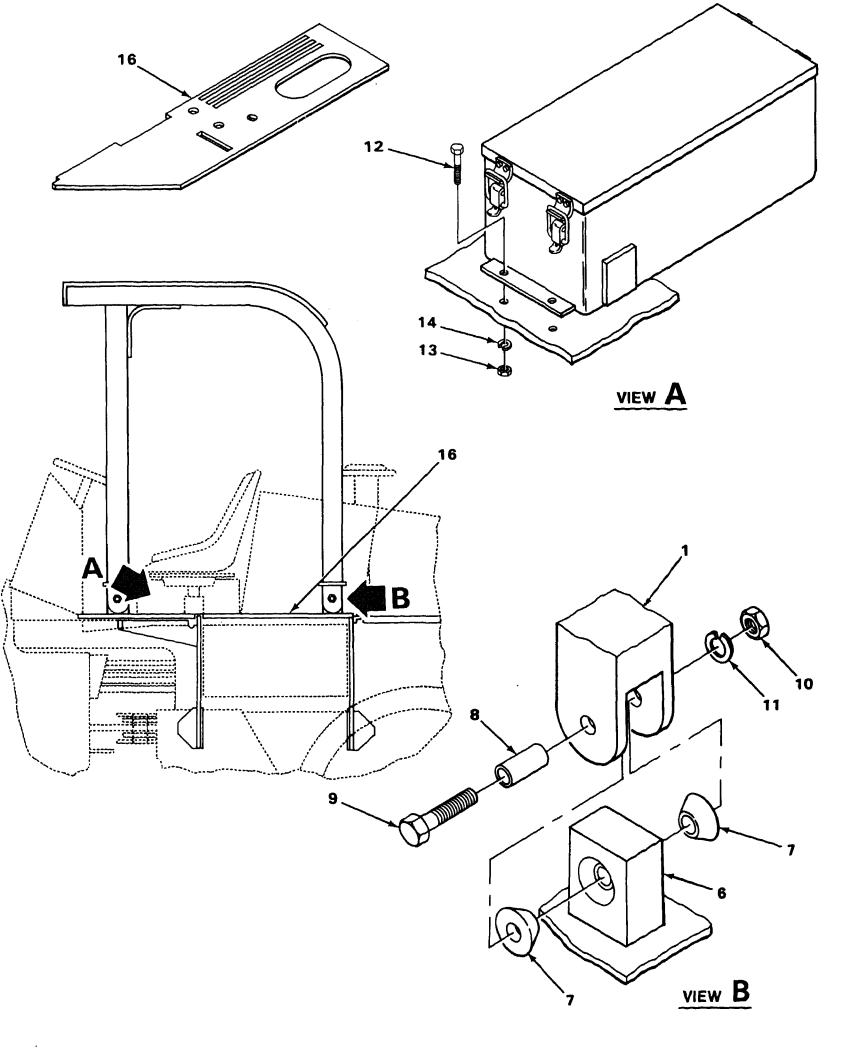

Figure 29A. Roll Over Protective Structure Assembly

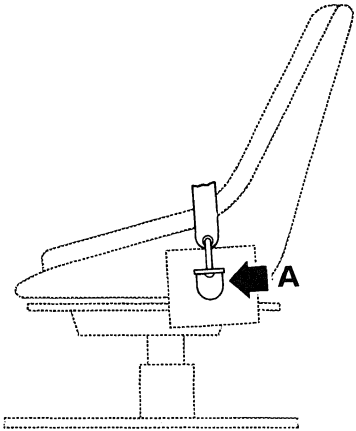

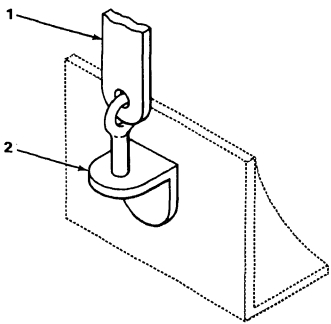

VIEW **A**

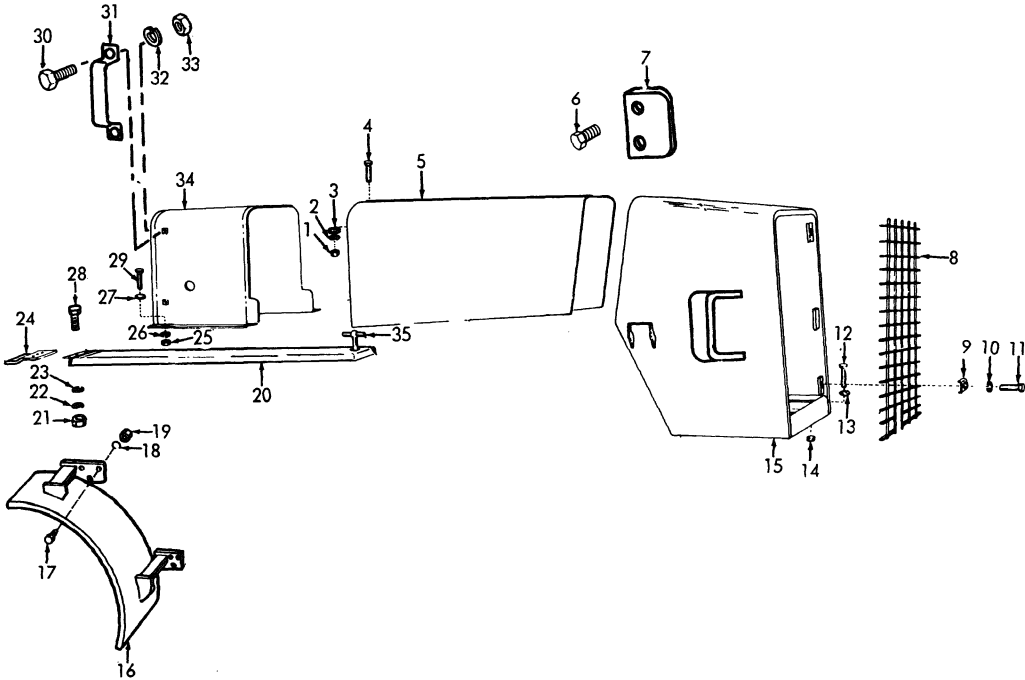

Figure 30. Hood and Fenders

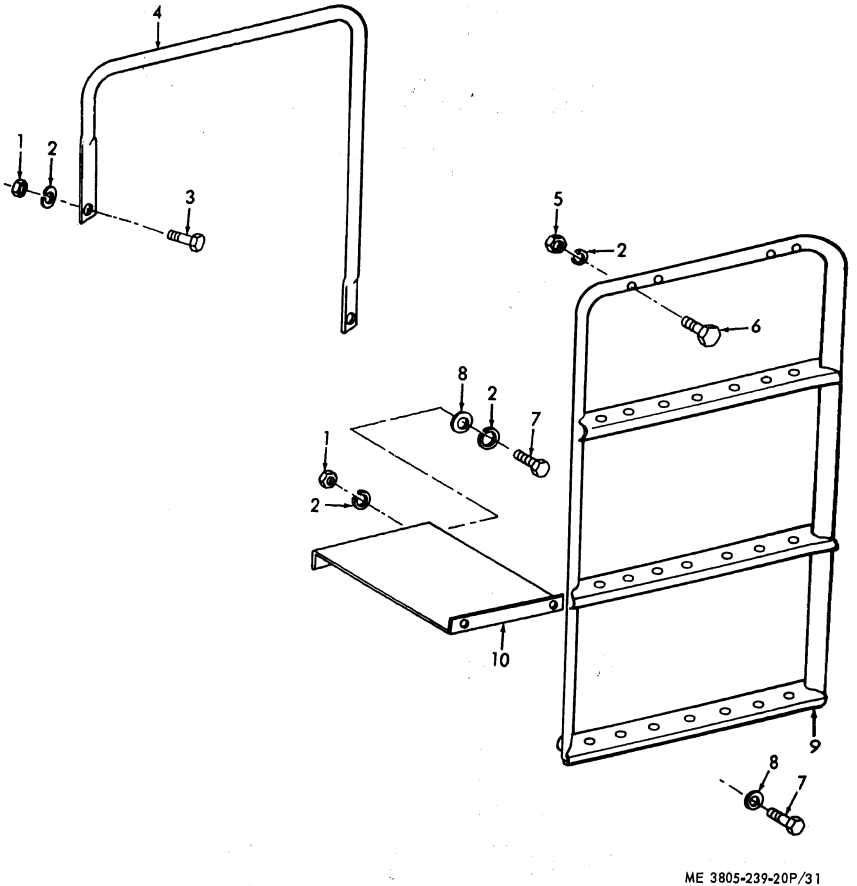

Figure 31. Ladder and Handrail

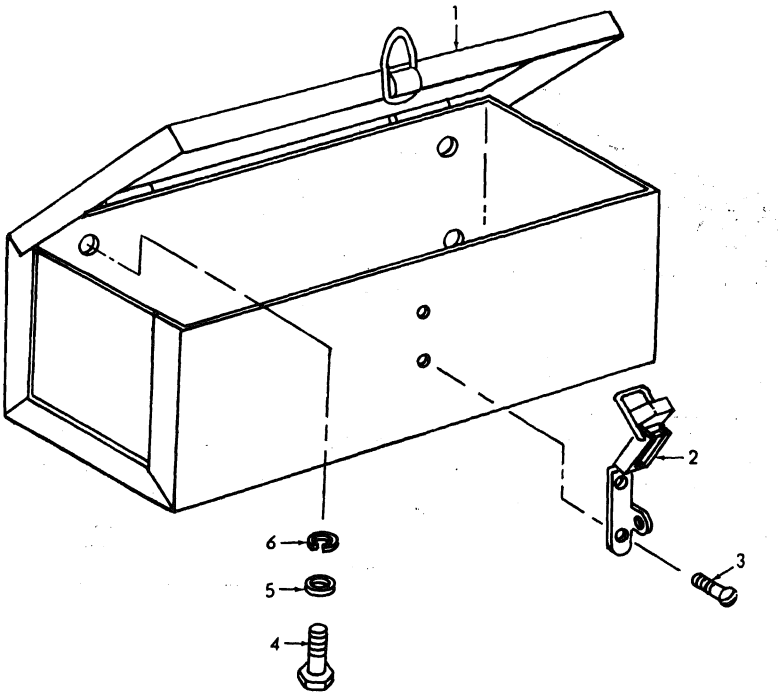

ME 3805-239-20P/32

Figure 32. Tool Box

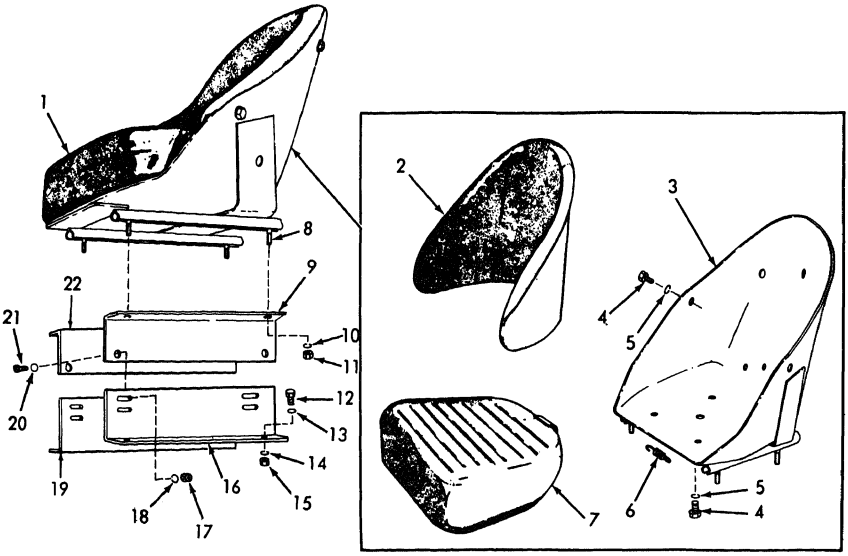

Figure 33. Seat

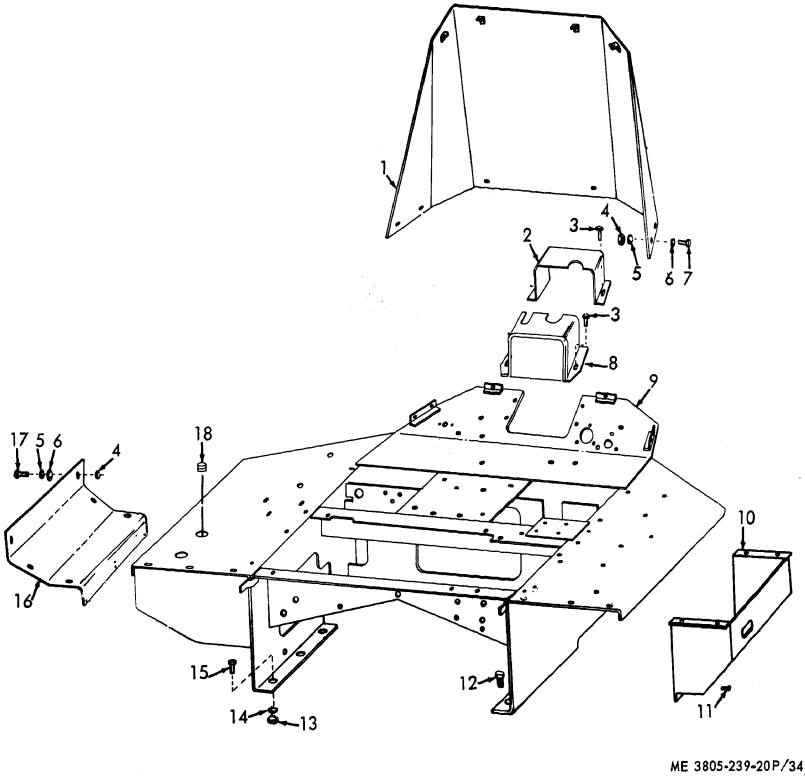

Figure 34. Platform and Covers

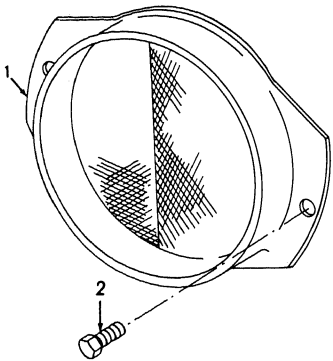

ME 3805-239-20P/35

Figure 35. Reflector

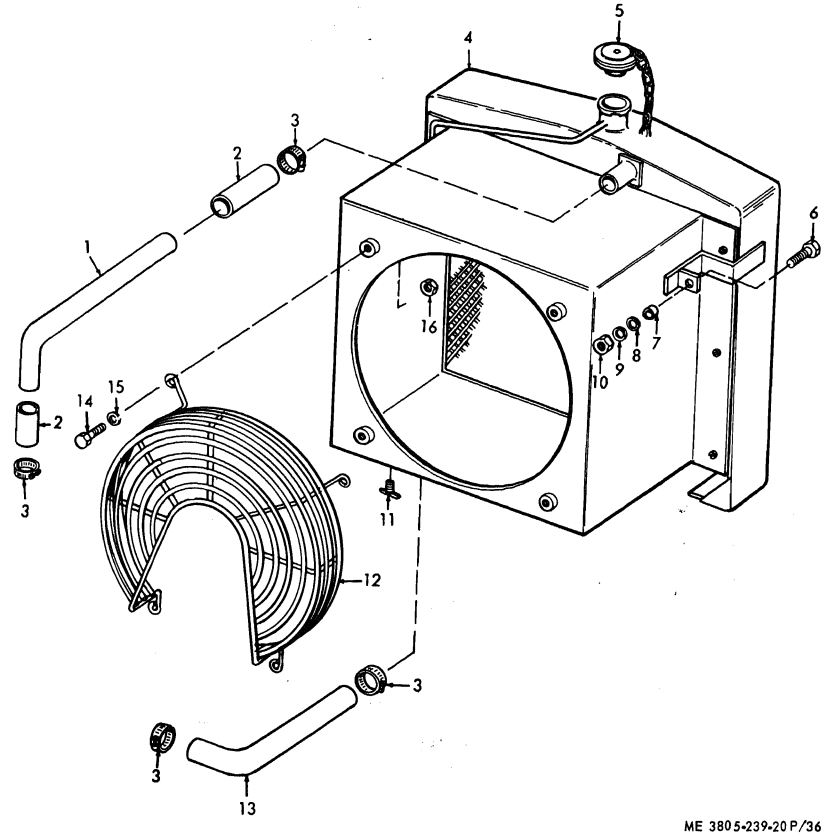

Figure 36. Radiator, Guards and Hoses

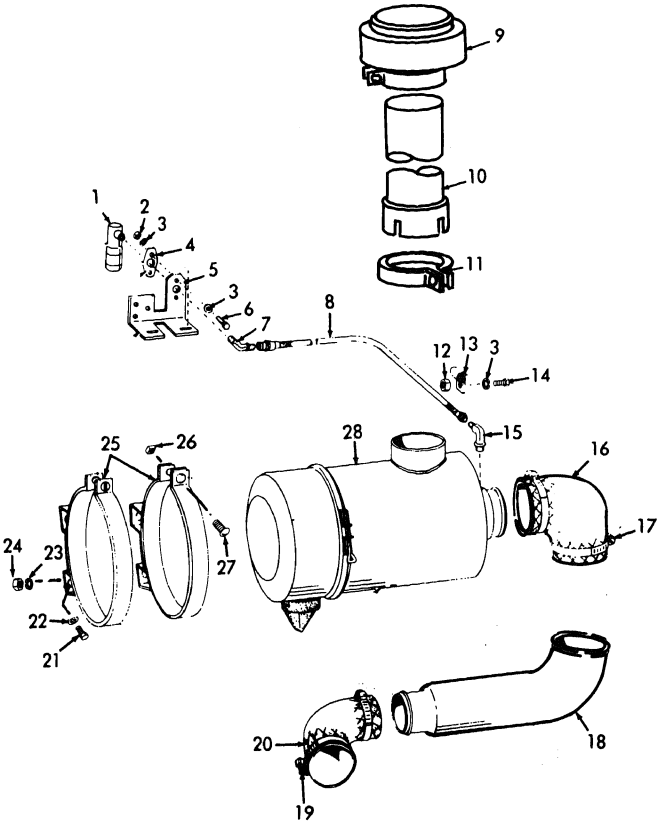

Figure 38. Air Cleaner and Indicator

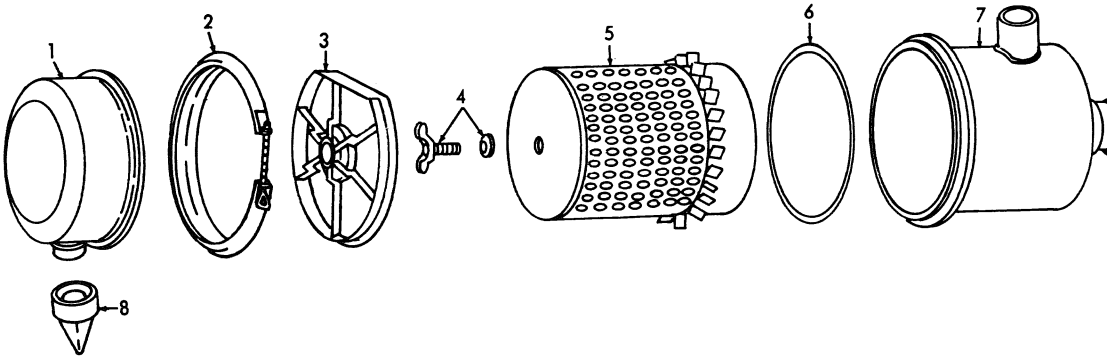

ME 3805-239-20P/39

Figure 39. Air Cleaner

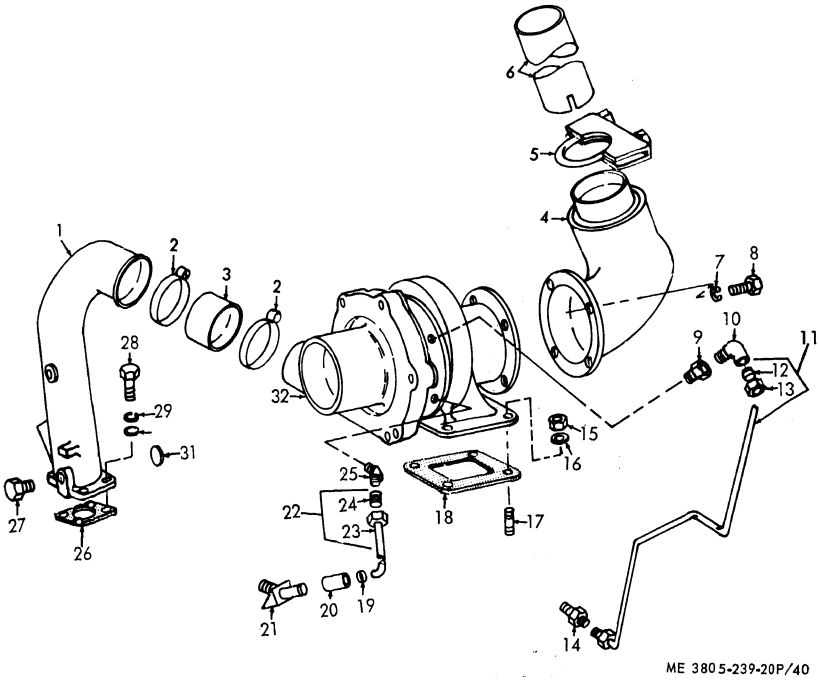

Figure 40. Turbocharger Mounting and Lines

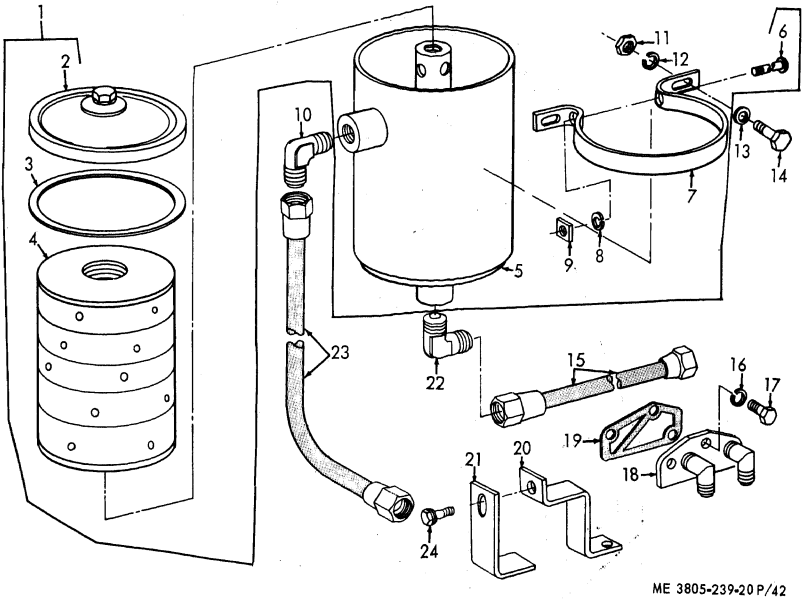

Figure 42. Oil Filter

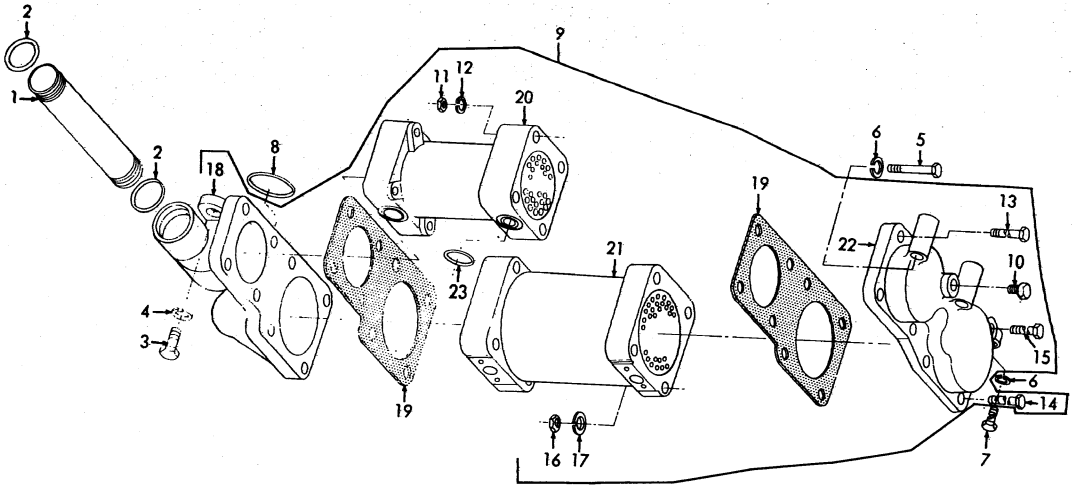

ME 3805-239-20P/43

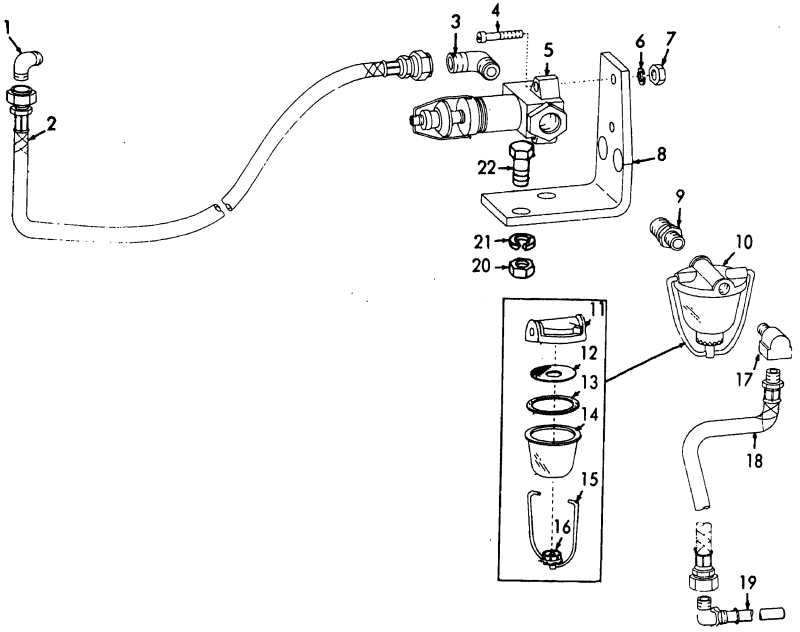

ME 3805-239-20P/44

Figure 44. Fuel Filter, Primer and Lines

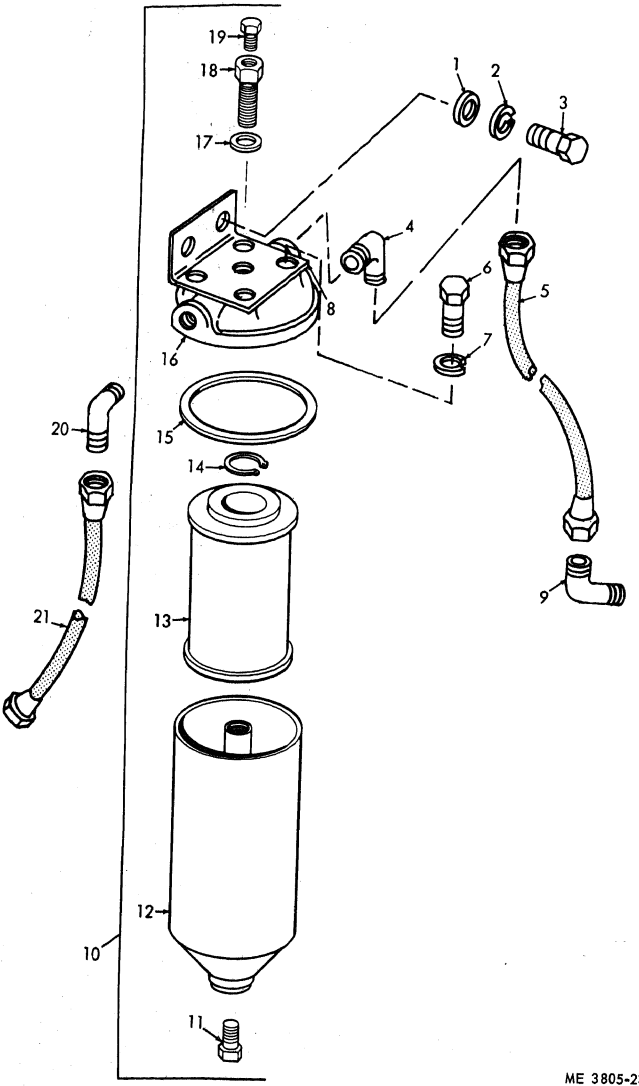

ME 3805-239-20P/45

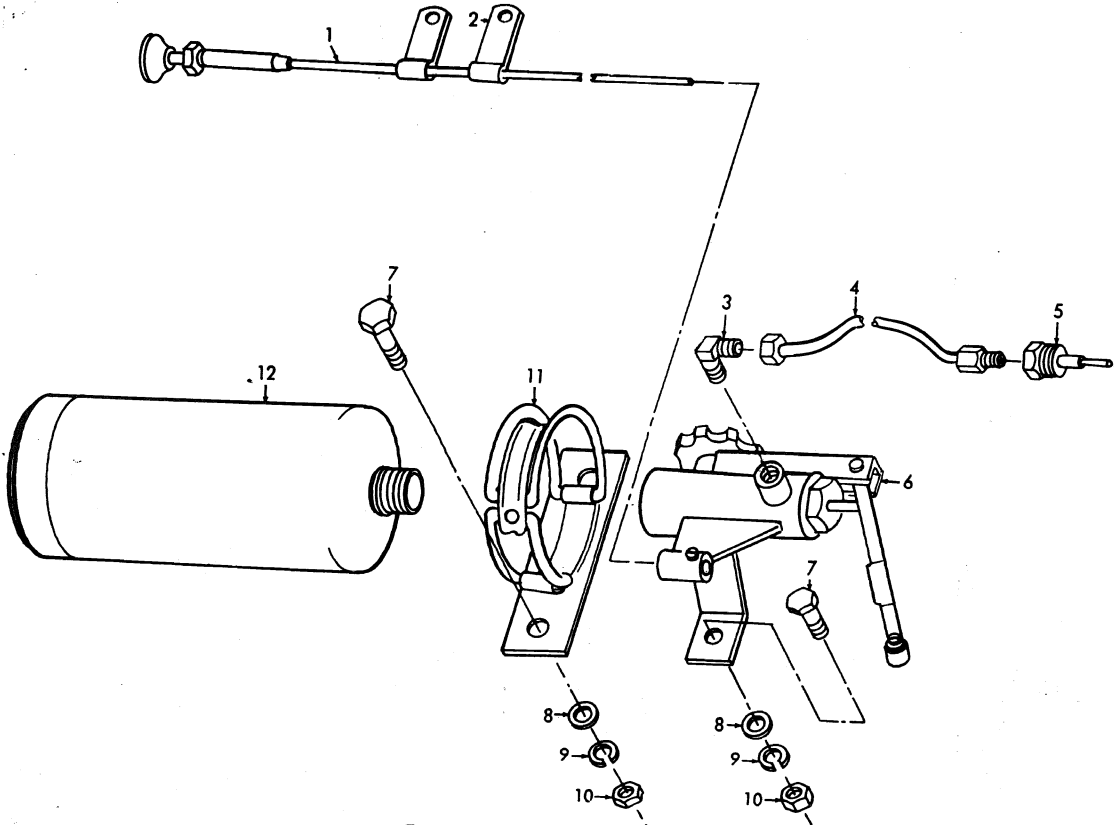

Figure 46. Priming System

ME 3805-239-20P/46

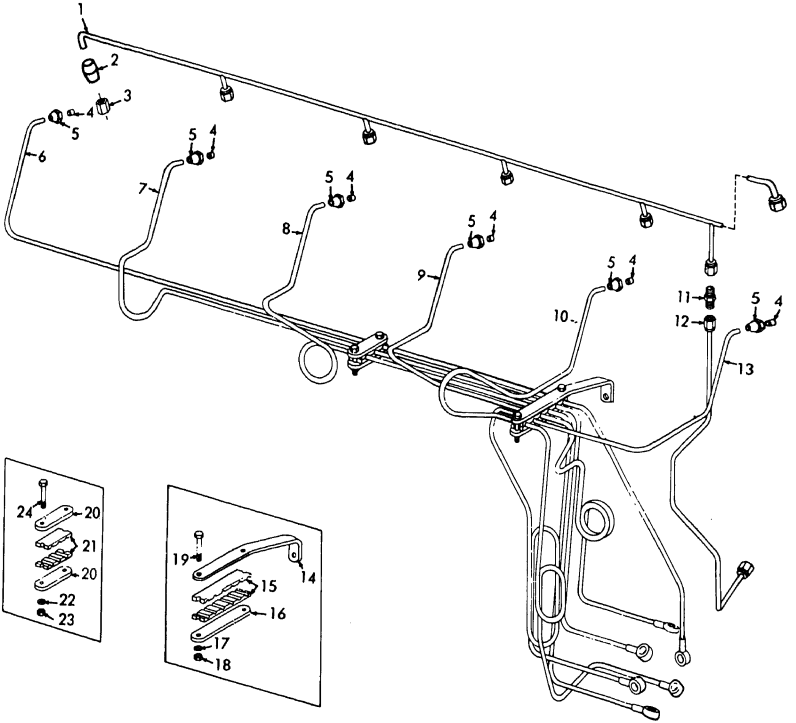

ME 3805-239-20P/47

Figure 47. Fuel Injection Lines

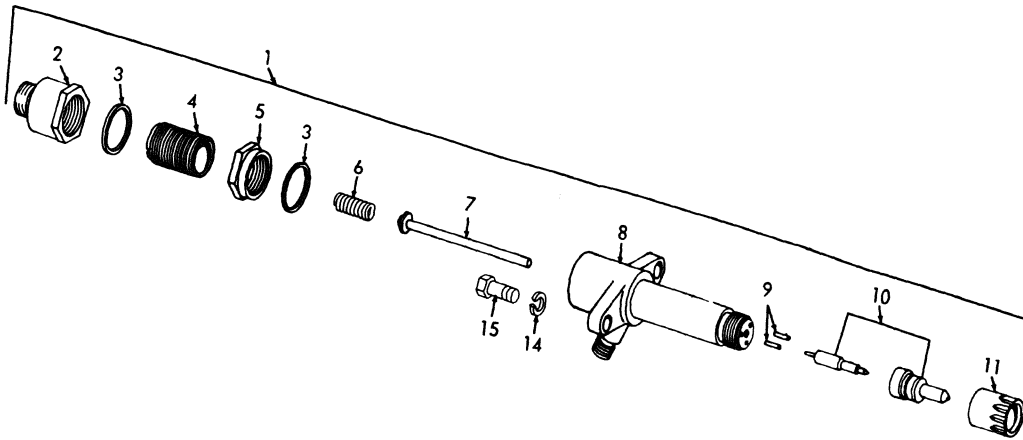

ME 3805-

Figure 48. Fuel Injector

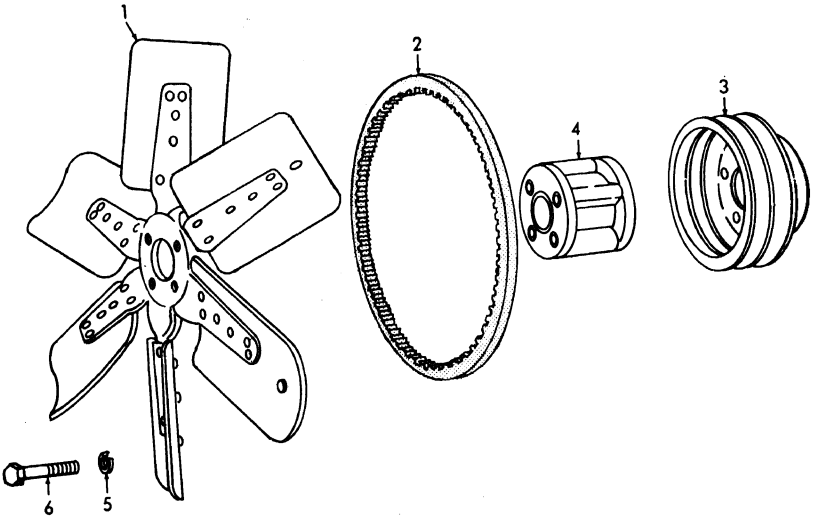

ME 3805-239-20P/53

Figure 53. Fan and Pulley

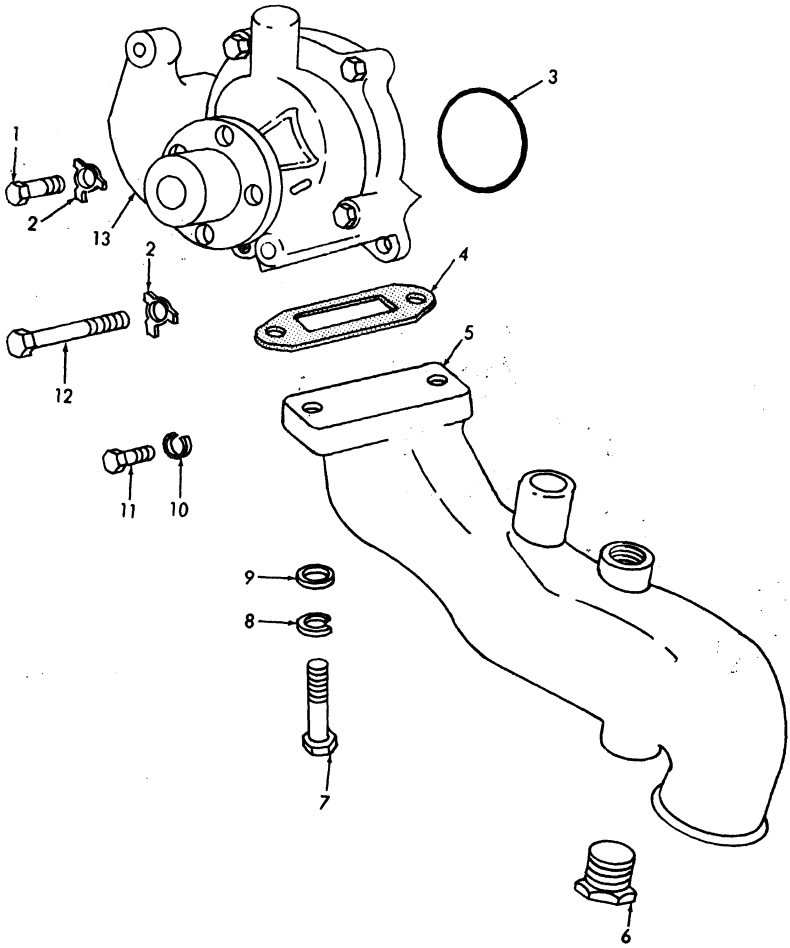

ME 3805-239-20P/54

Figure 54. Water Pump and Inlet Pipe

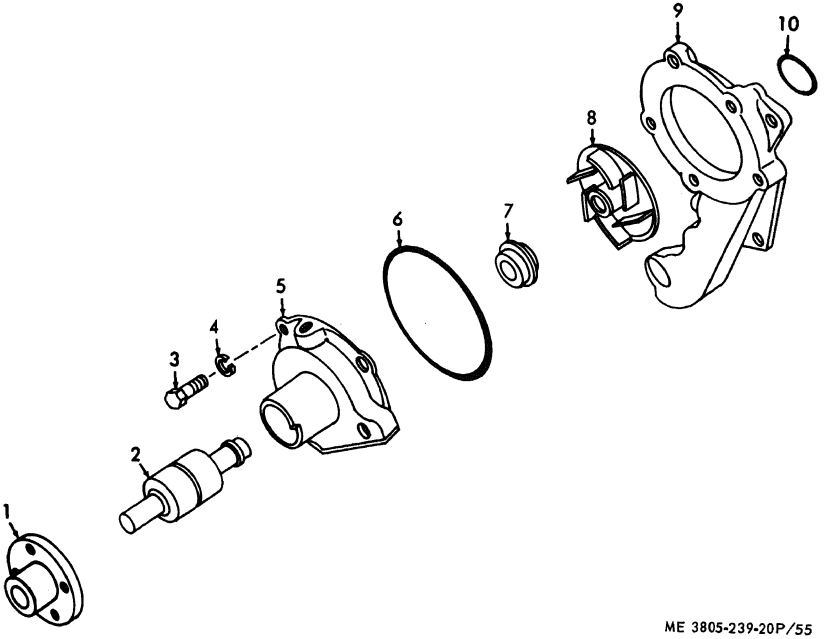

Figure 55. Water Pump

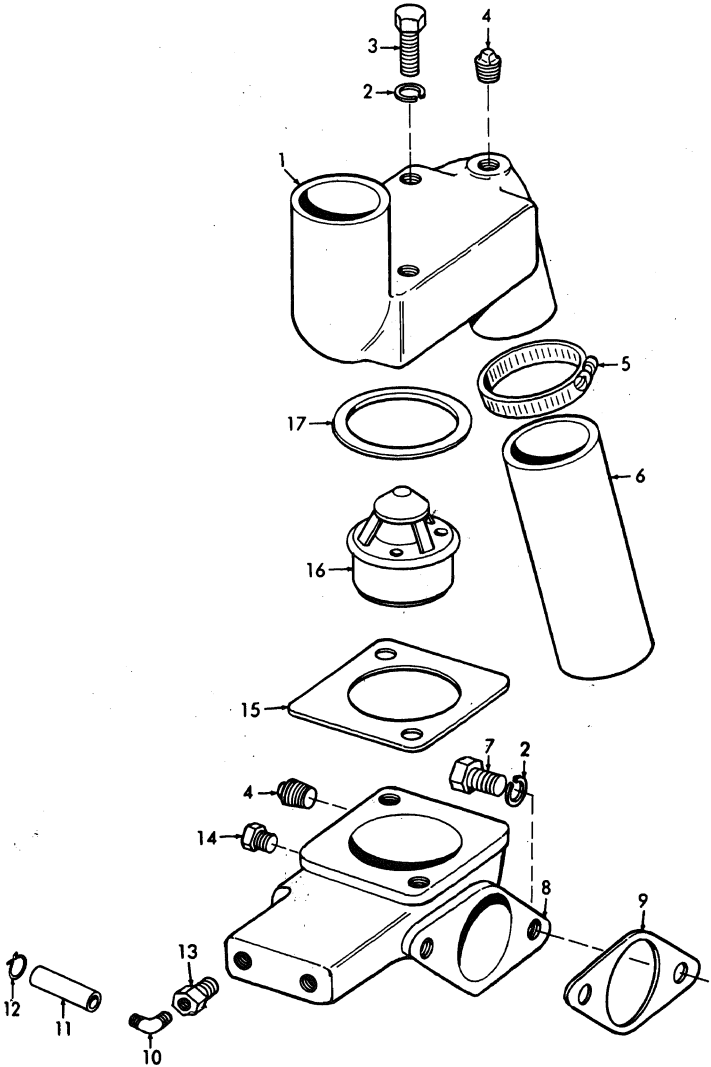

ME 3805-239-20P/56

Figure 56. Thermostat and Housing

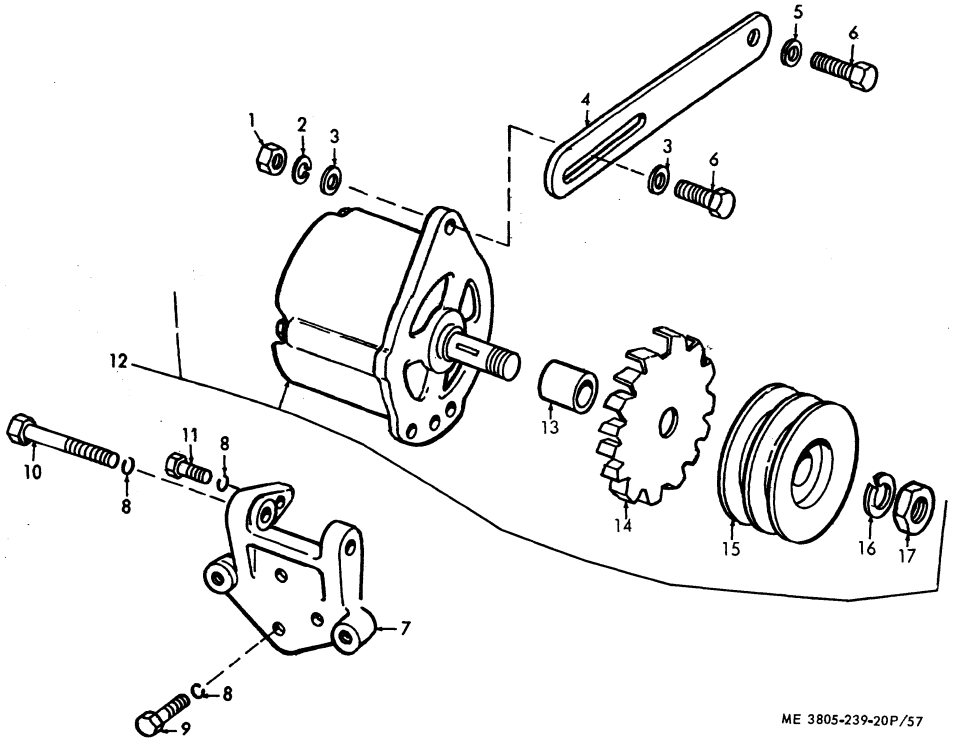

Figure 57. Alternator and Mounting

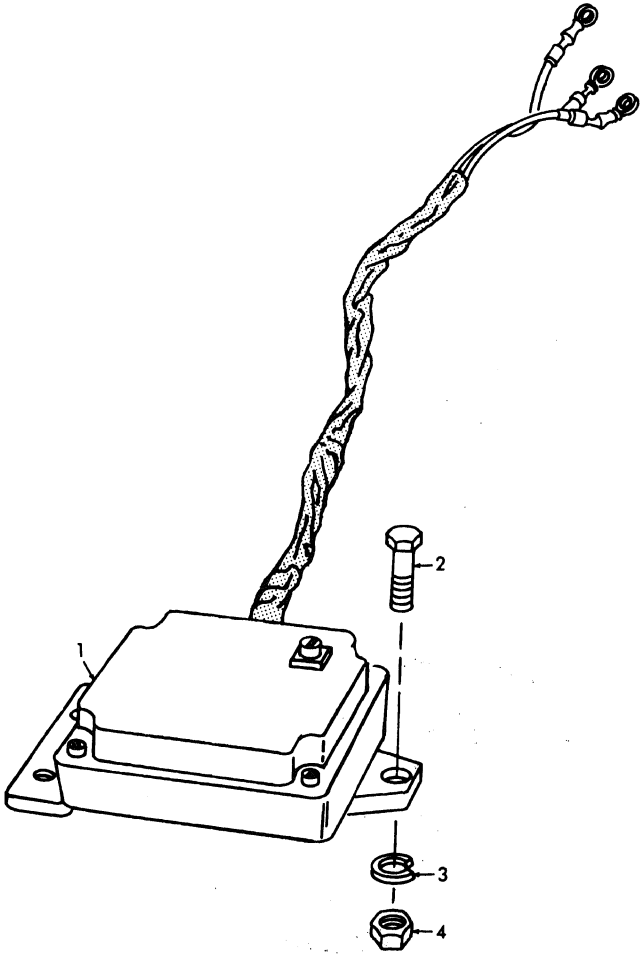

ME 3805-239-20 P/59

Figure 59. Regulator

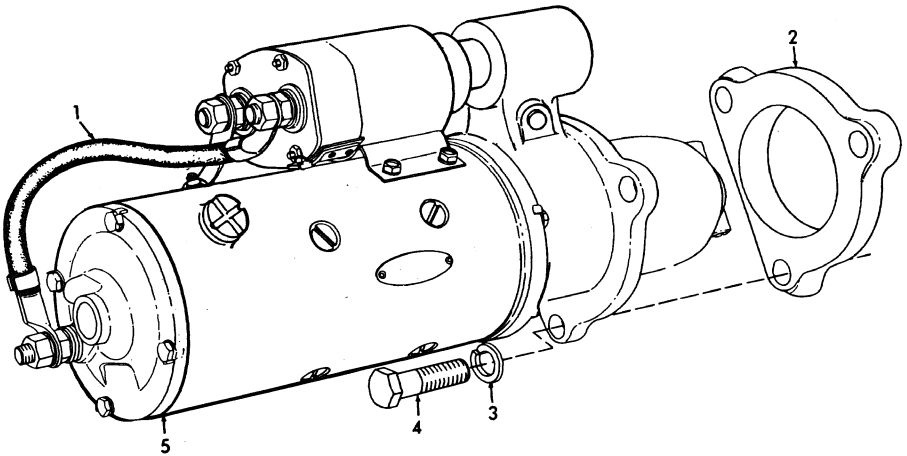

ME 3805-239-20P/60

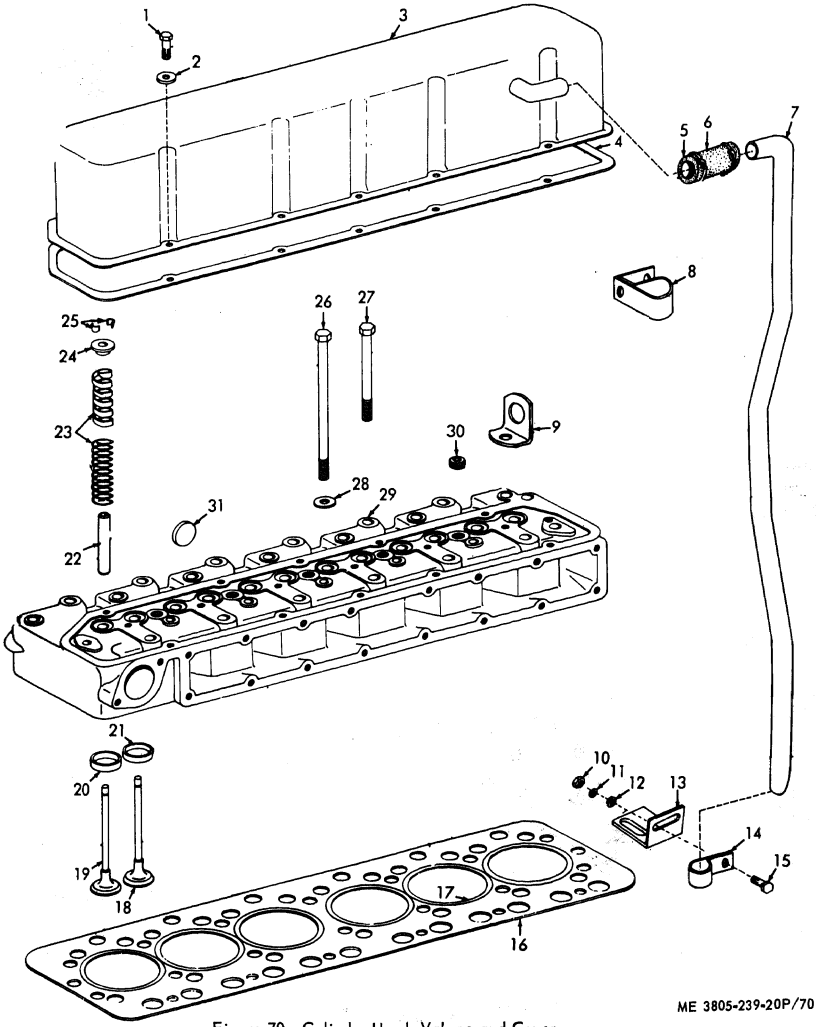

ME 3805-239-20P/70

Figure 70. Cylinder Head, Valves and Cover

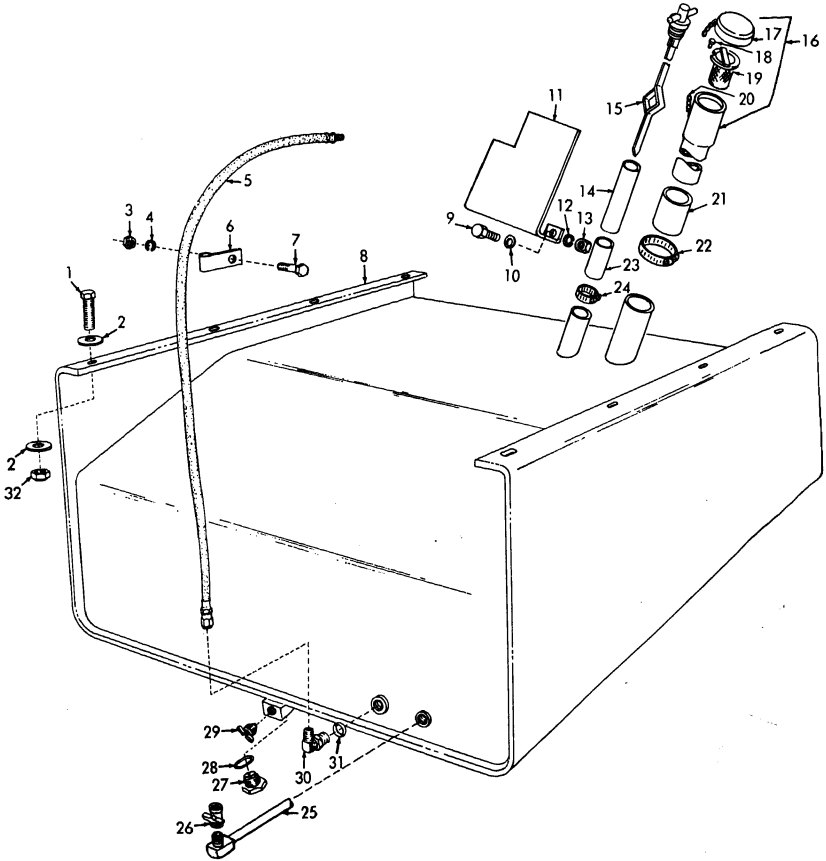

ME 380 5-239-20 P/77

Figure 77. Fuel Tank

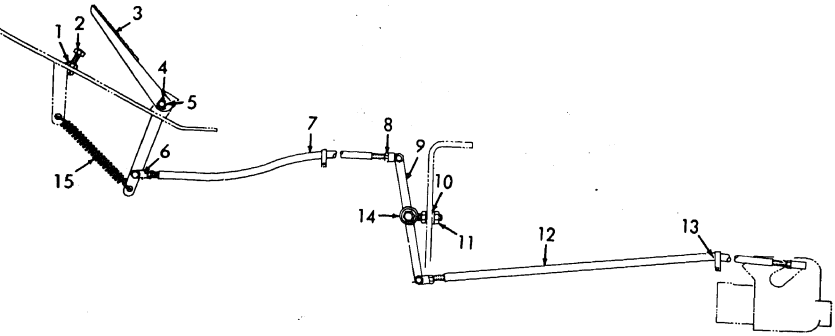

ME 3805-239-20 P/78

Figure 78. Throttle Control

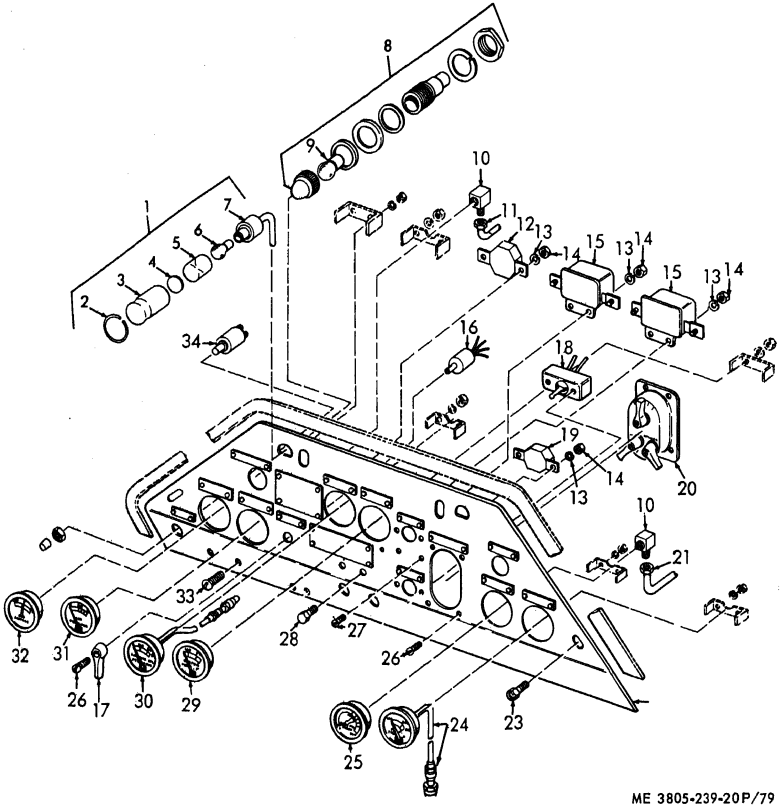

Figure 79. Instrument Panel, Gages, Lights and Switches

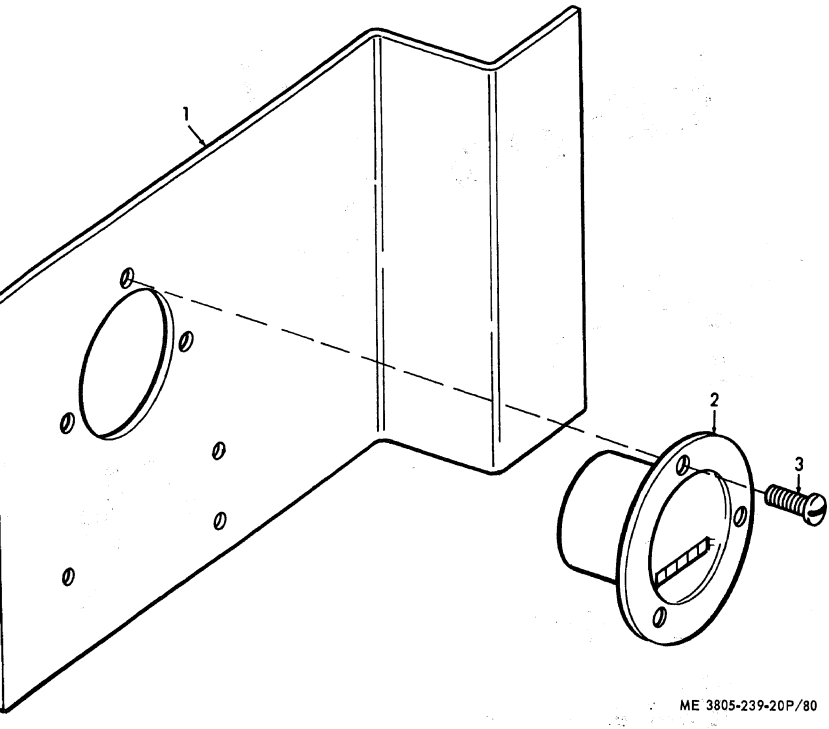

Figure 80. Hourmeter

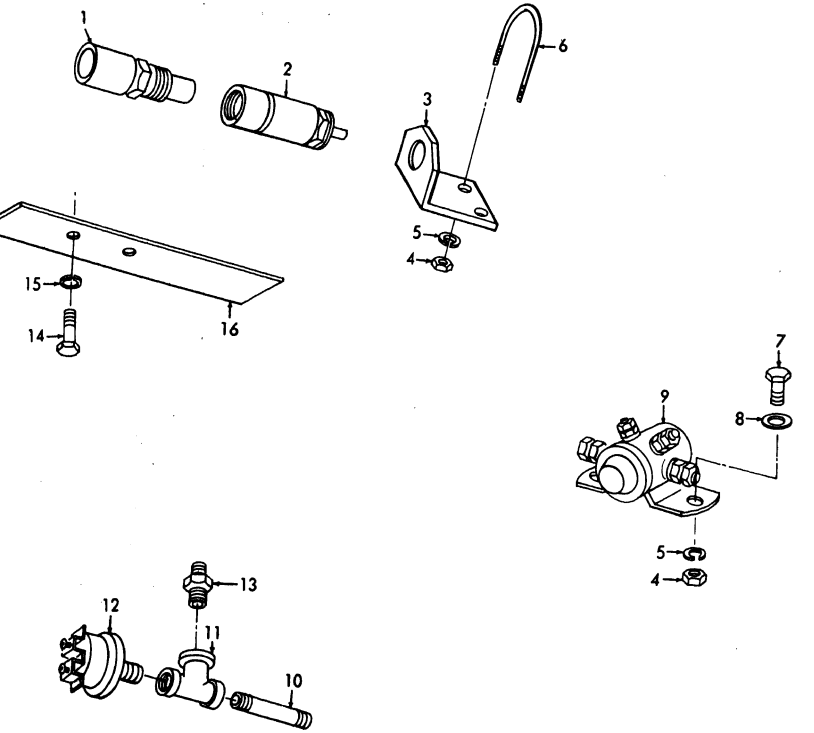

ME 3805-239-20P/81

Figure 81. Starting Switch, Solenoid and Pressure Switch

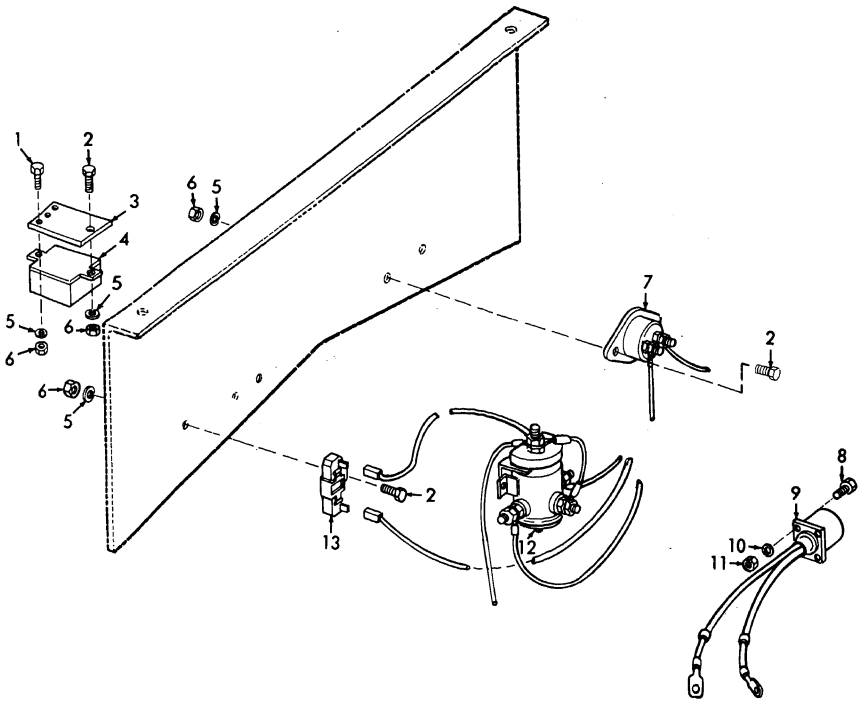

ME 3805-239-20 P/82

Figure 82. Slave Receptacle, Polarity Protector, Resistor and Circuit Breaker

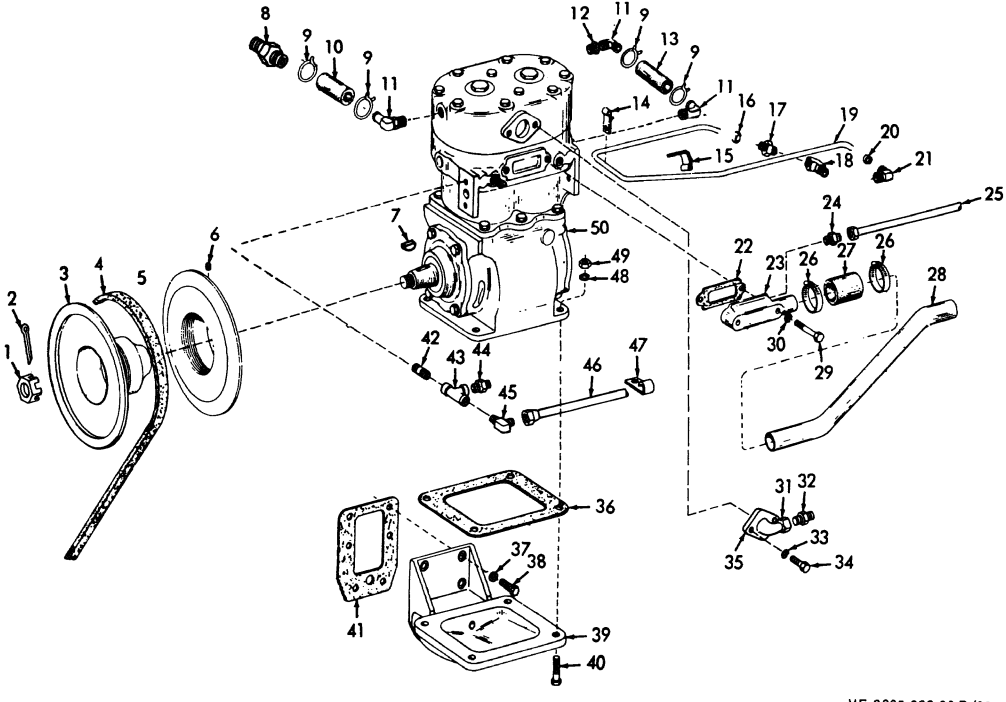

Figure 83. Air Compressor and Lines

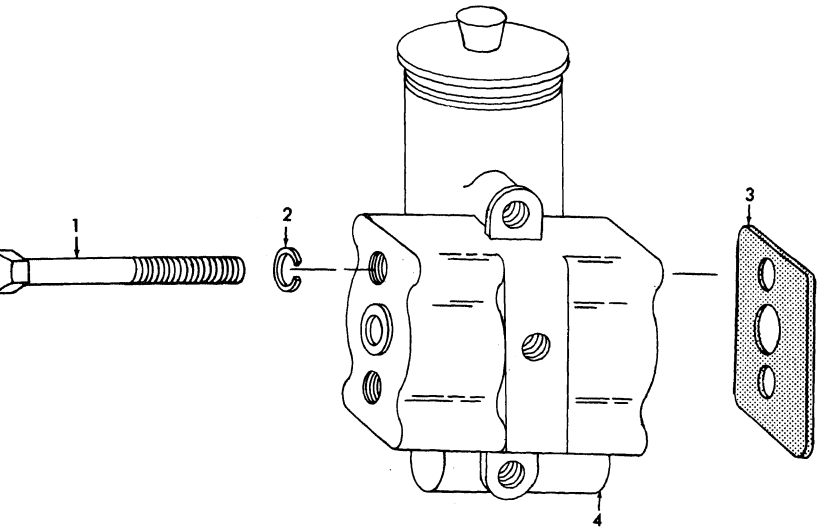

ME 3805-239-20 P/87

Figure 87. Governor Mounting

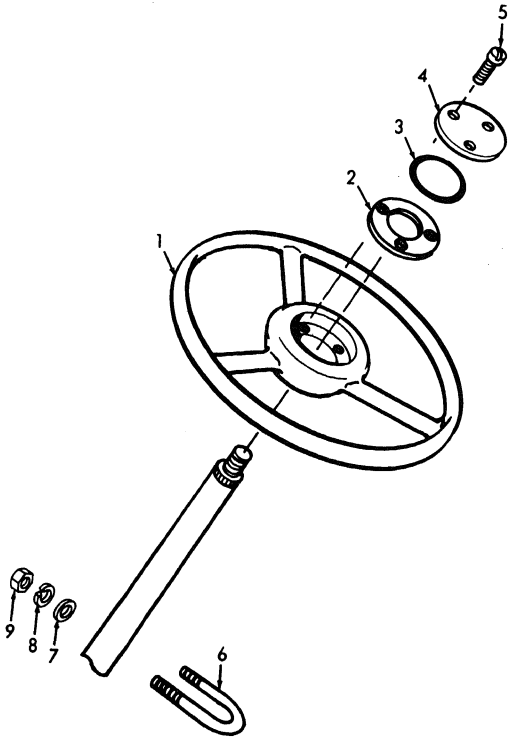

ME 3805-239-20P/89

Figure 89. Steering Wheel

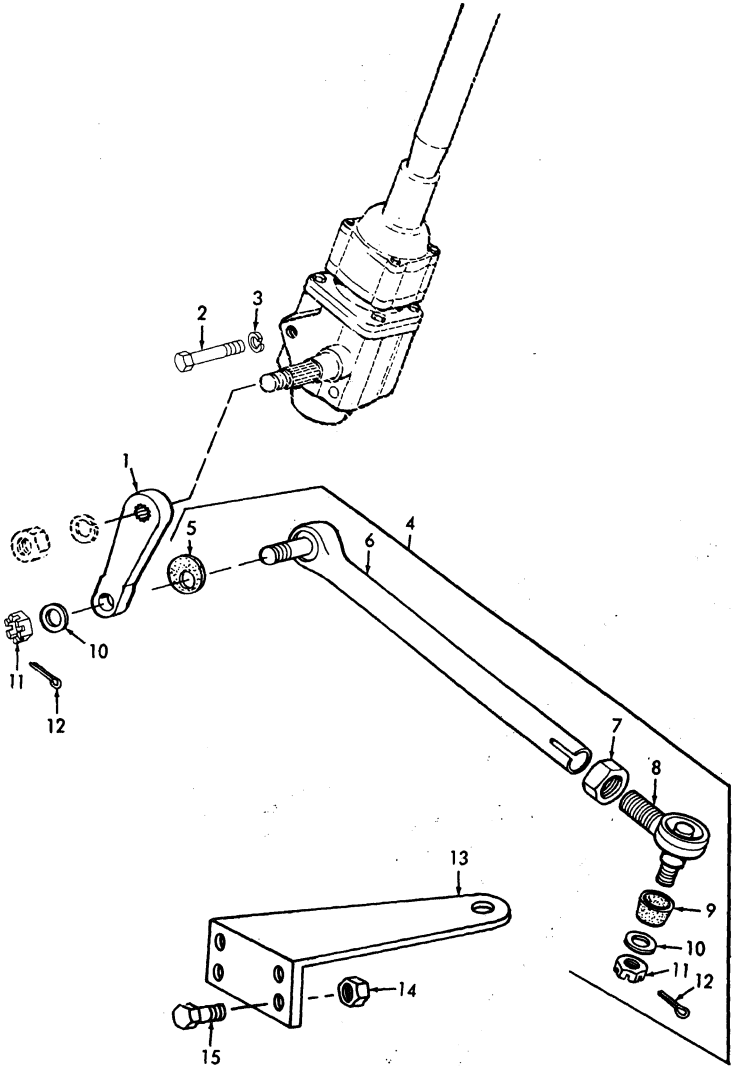

Figure 91. Tire Rod

ME 3805-239-20 P/91

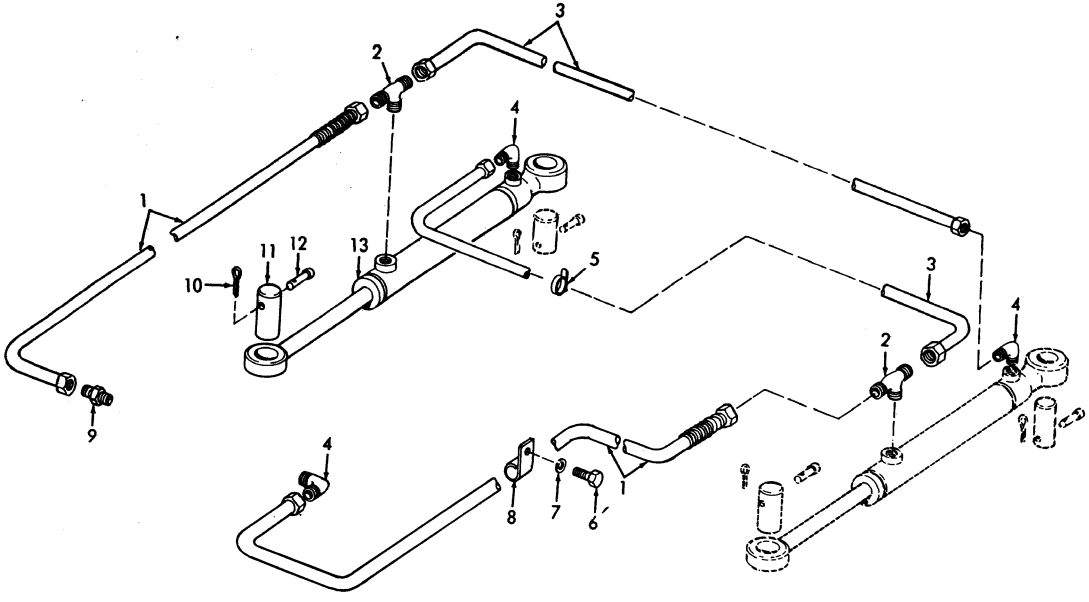

ME 3805-239-20P/92

Figure 92. Steering Cylinder and Lines

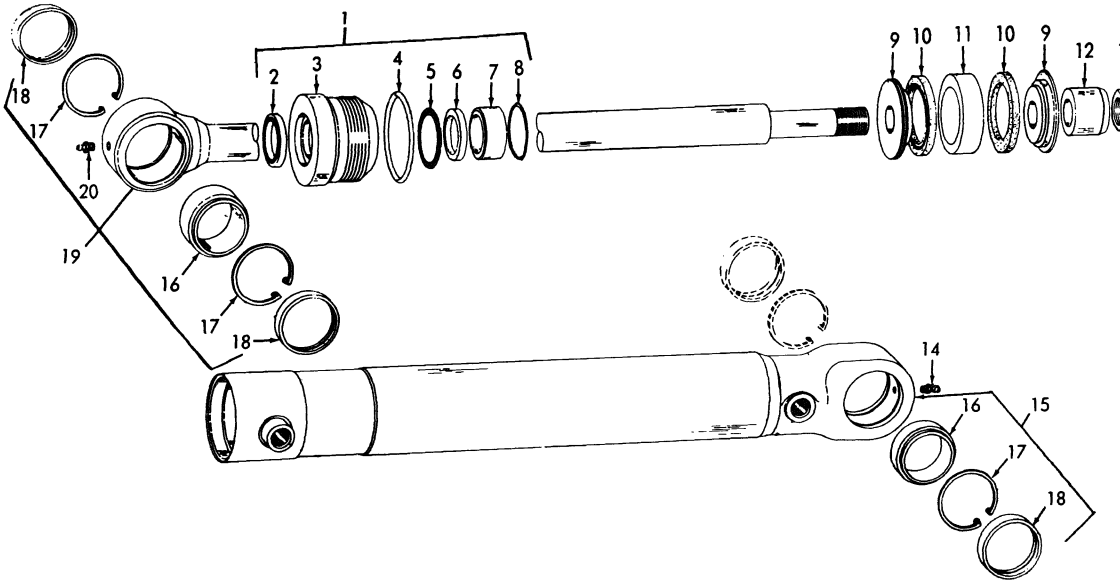

ME 3805-239-20 P/93

Figure 93. Steering Cylinder

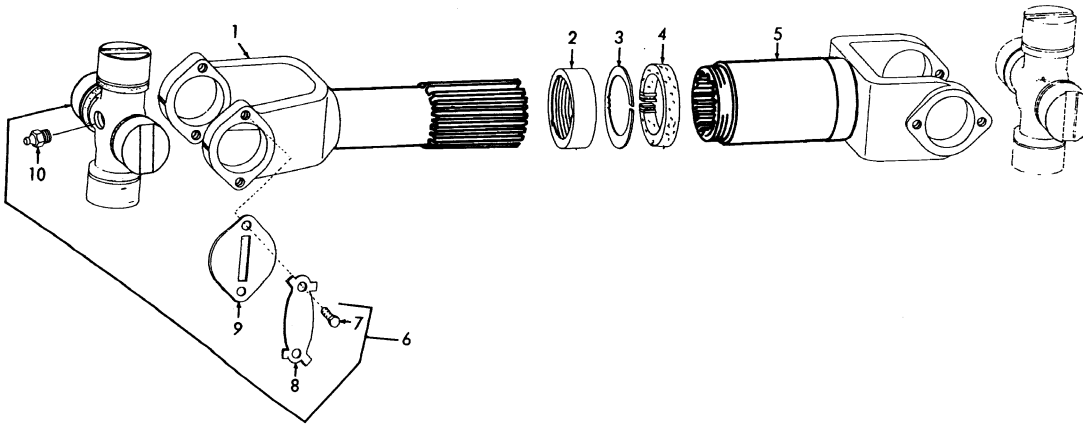

ME 3805-239-20P/95

Figure 95. Rear Drive Shaft

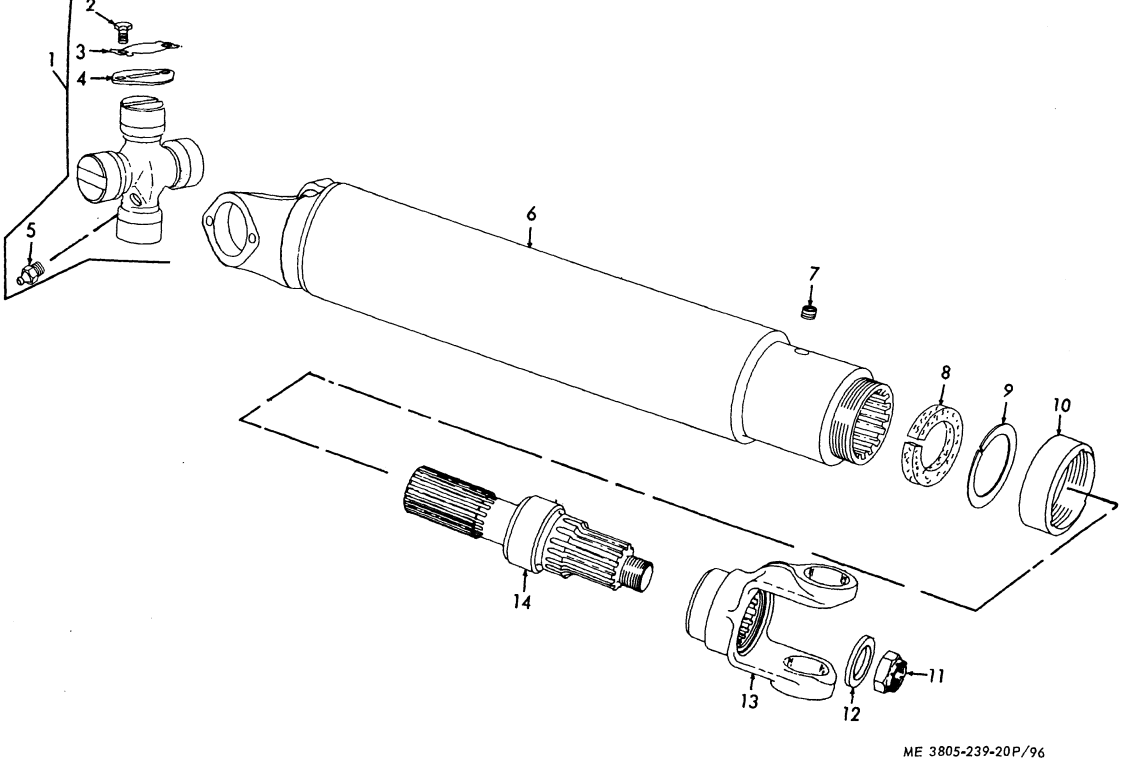

Figure 96. Front Drive Shaft

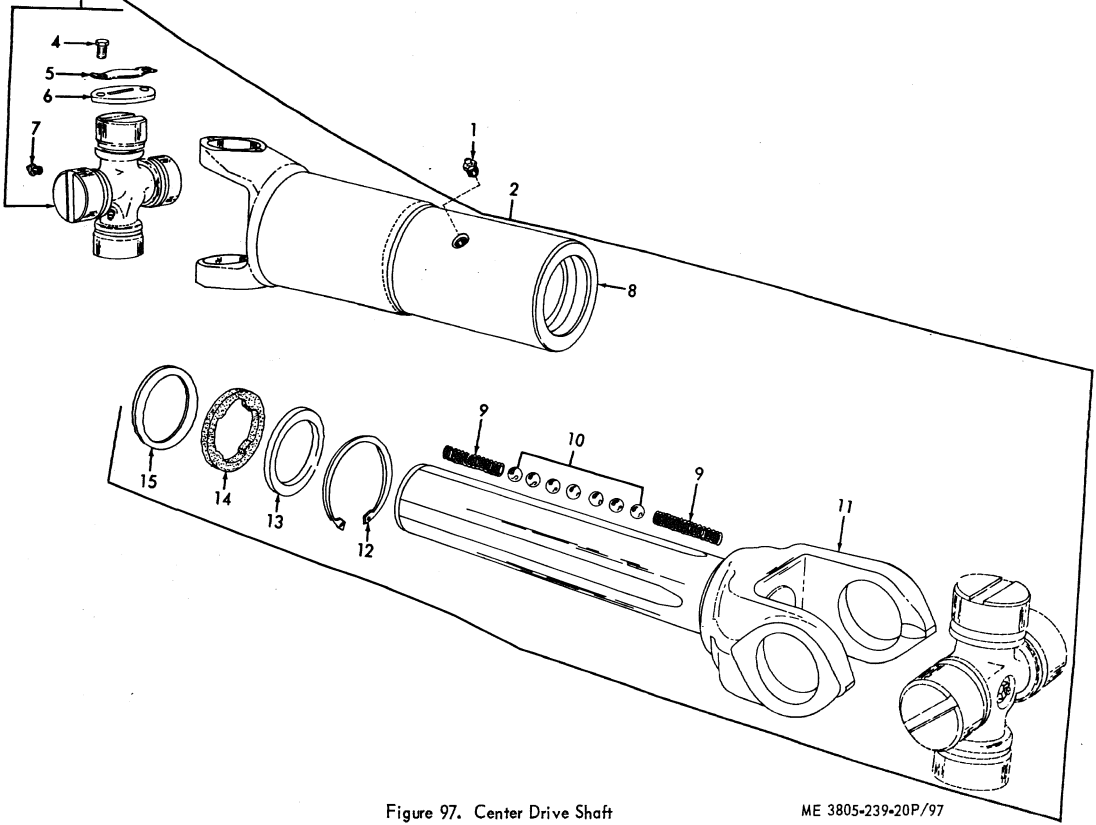

Figure 97. Center Drive Shaft

ME 3805-239-20P/97

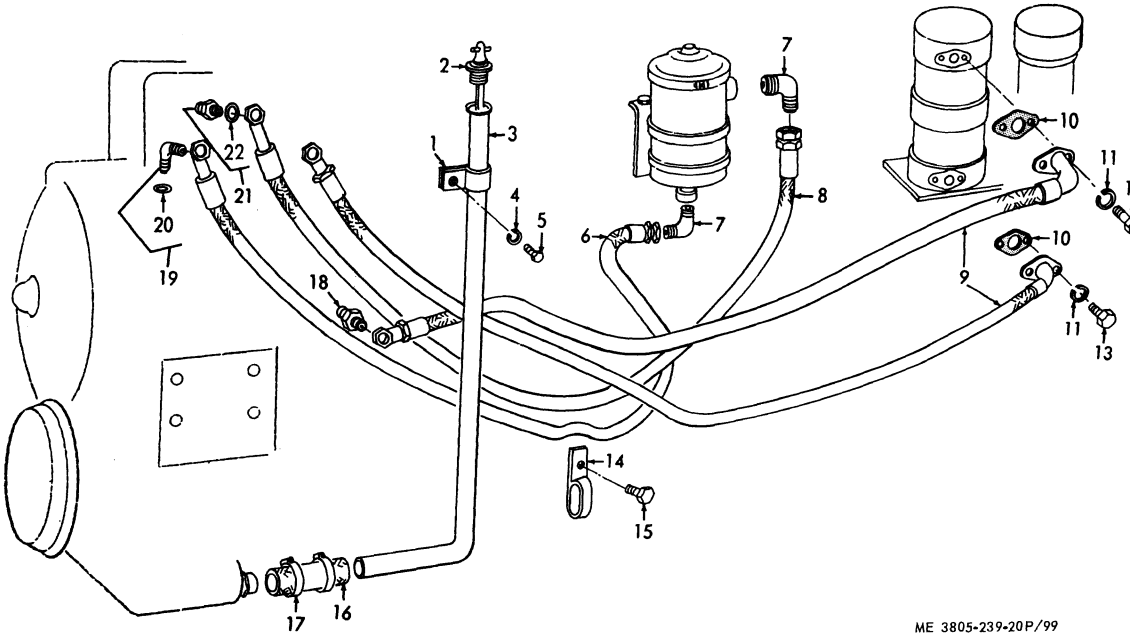

Figure 99. Transmission Oil Lines and Fittings

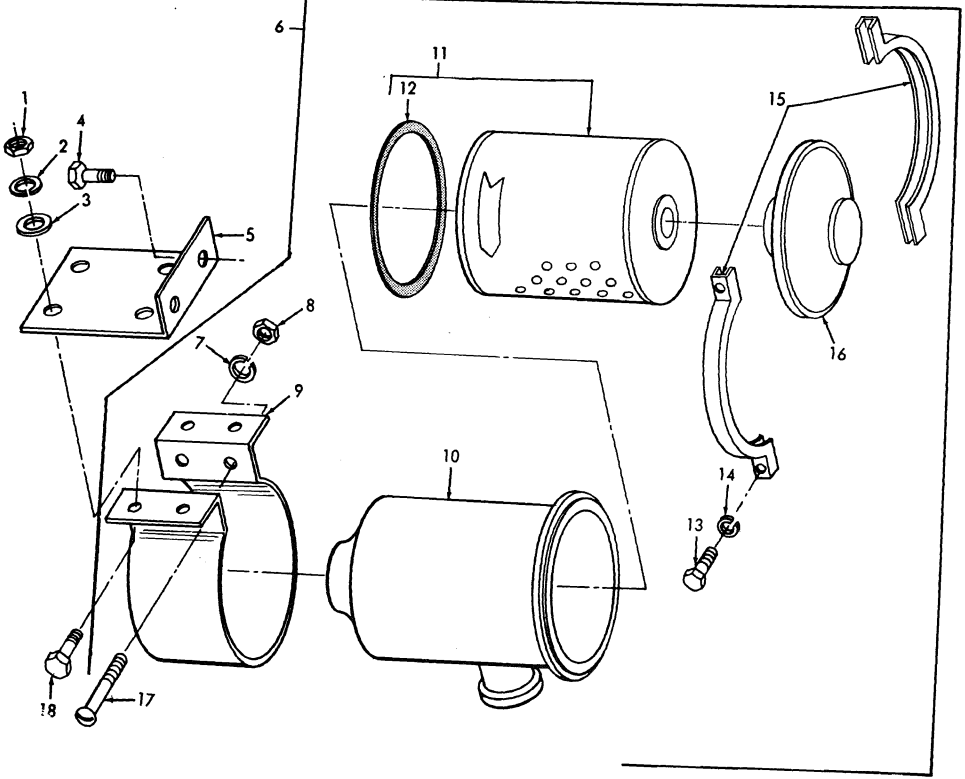

Figure 100. Transmission Oil Filter

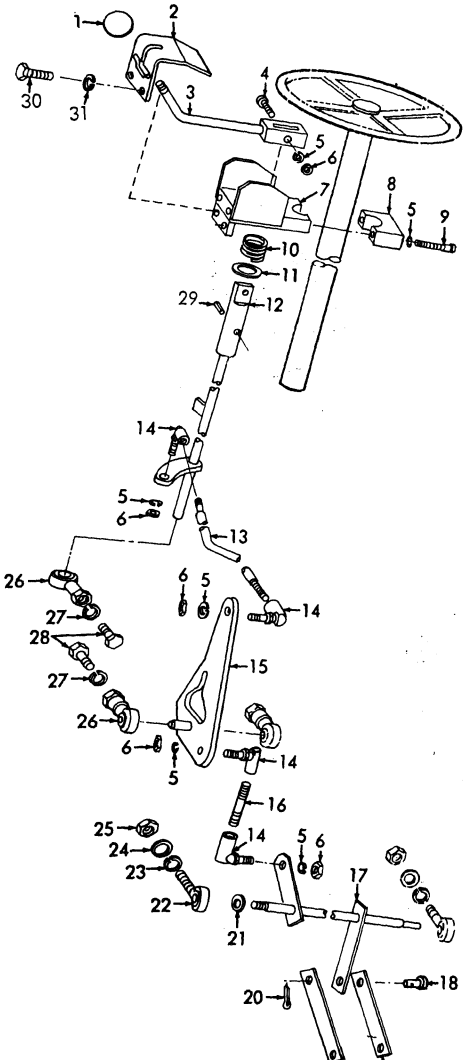
1
2
30
31
3
4
5
6
7
8
5
9
10
11
29
12
14
5
6
13
26
6
5
14
27
28
15
27
26
6
5
14
16
25
14
5
6
24
23
17
22
21
20
18

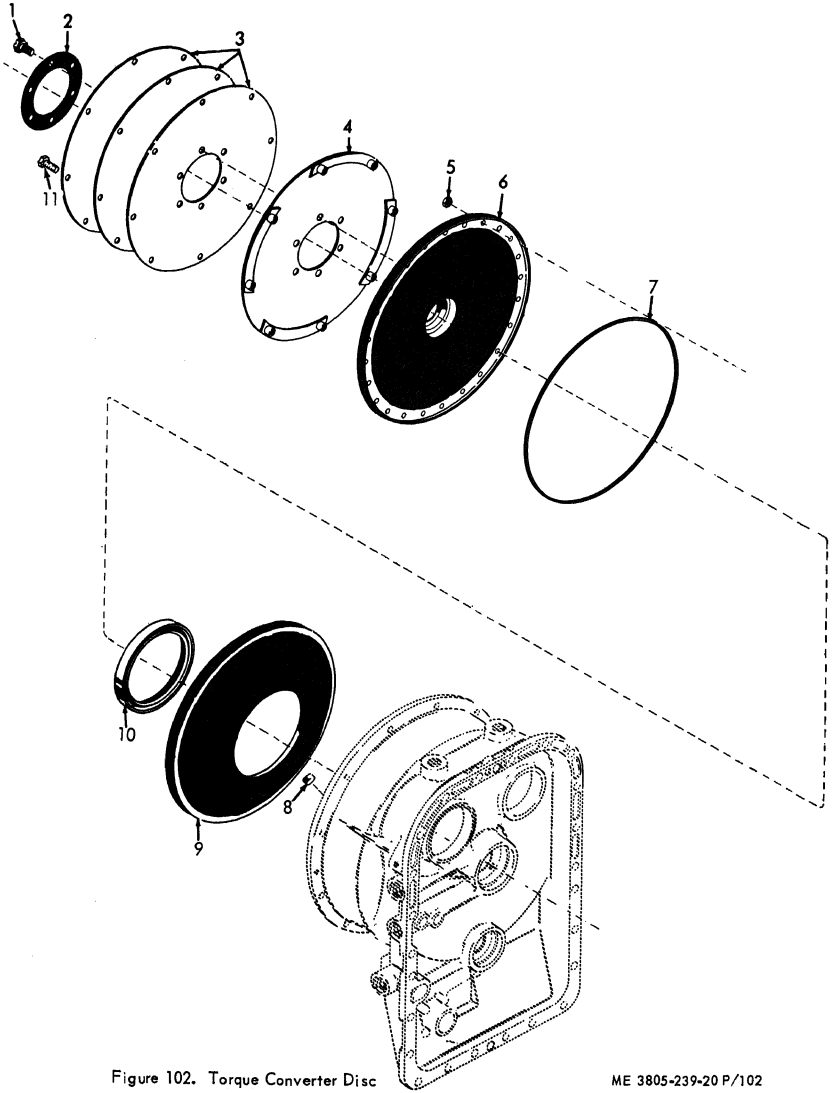

Figure 102. Torque Converter Disc

ME 3805-239-20 P/102

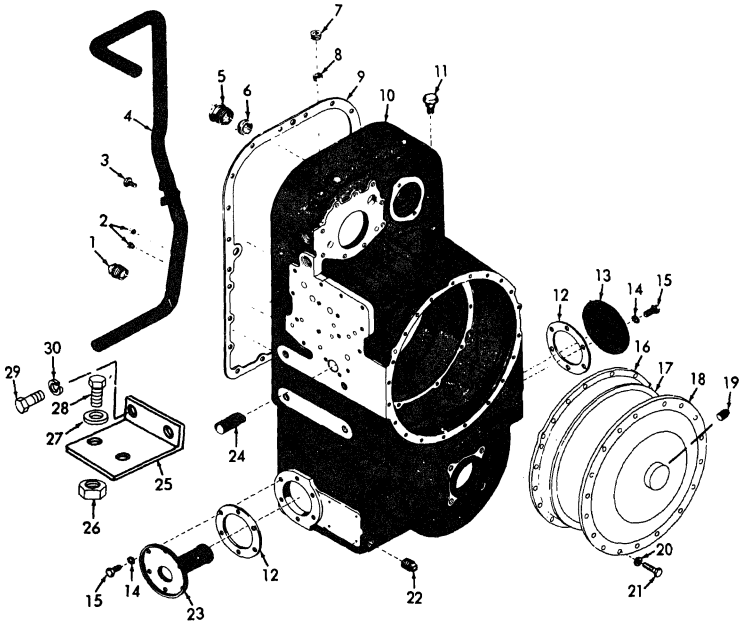

ME 3805-239-20P/113

Figure 113. Transmission Housing and Covers

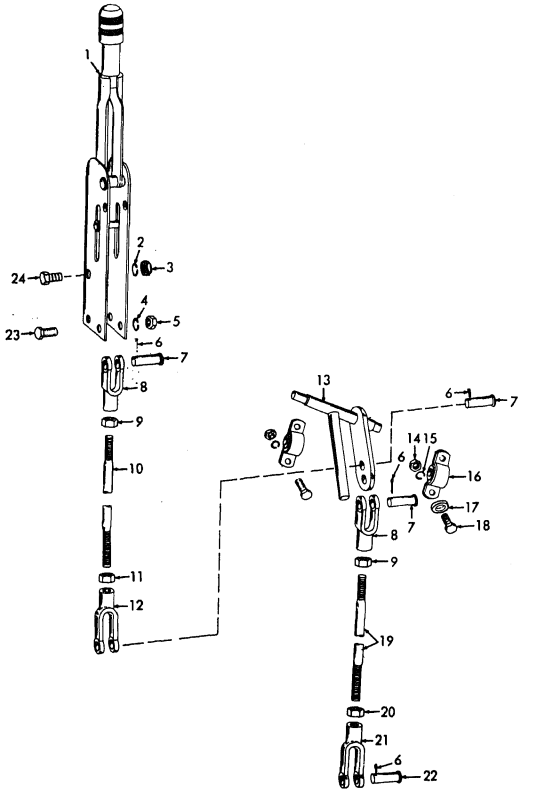

Figure 114. Parking Brake Control

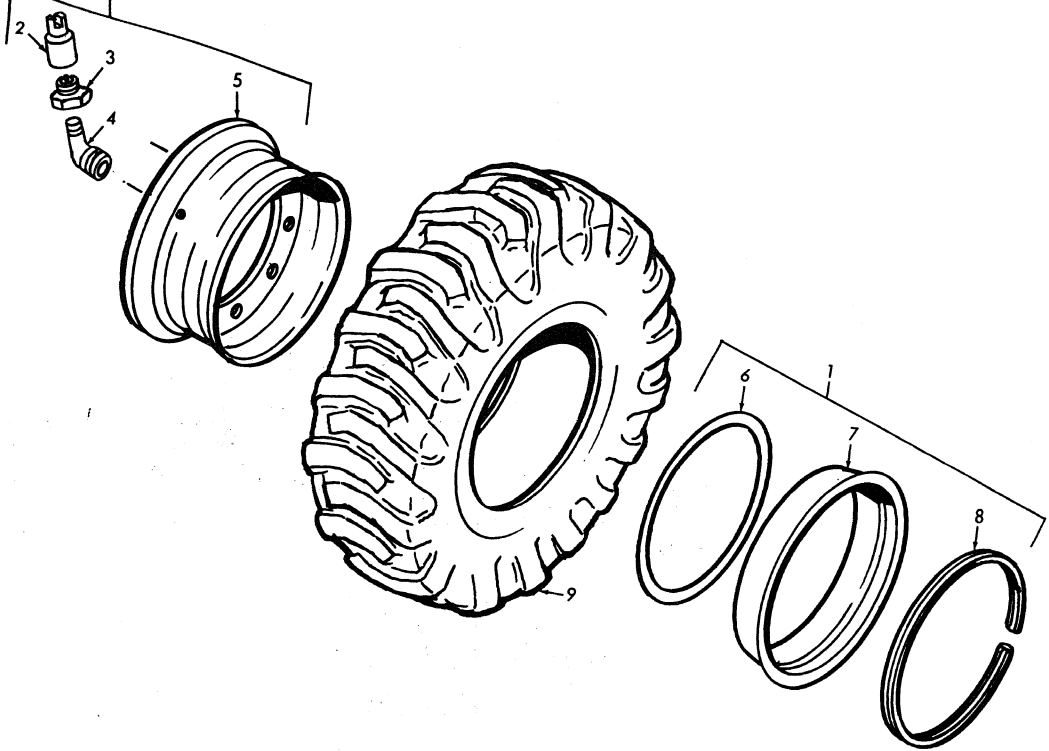

ME 3805-239-20P/116

Figure 116. Wheel and Tire

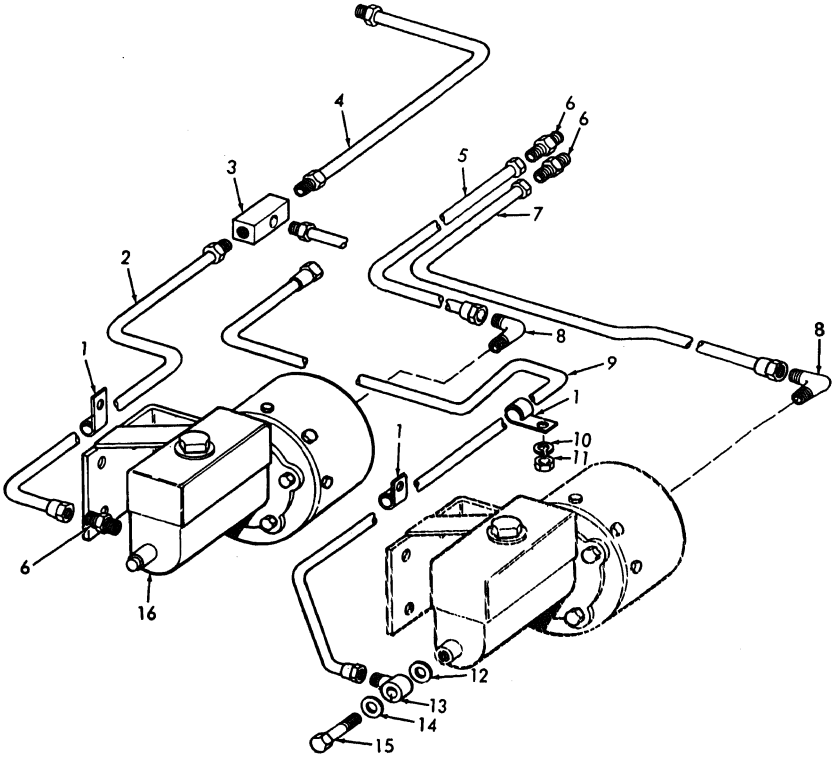

ME 3805-239-20P/117

Figure 117. Front and Rear Power Cluster and Lines

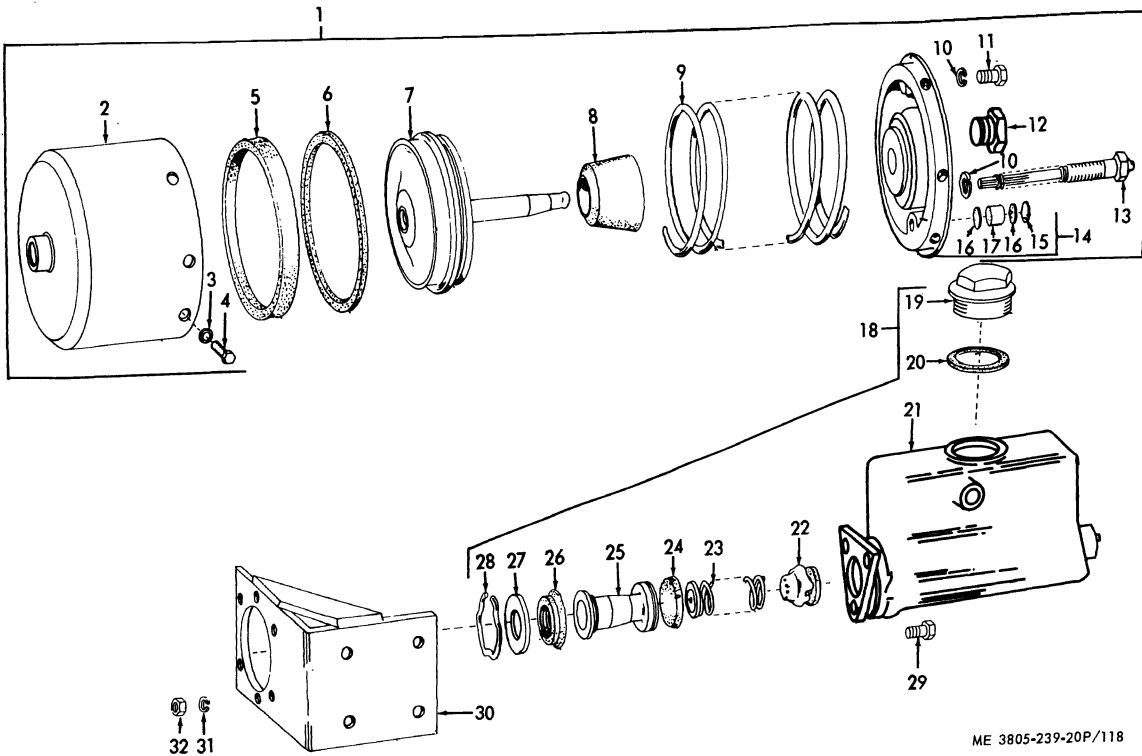

Figure 118. Front Power Cluster

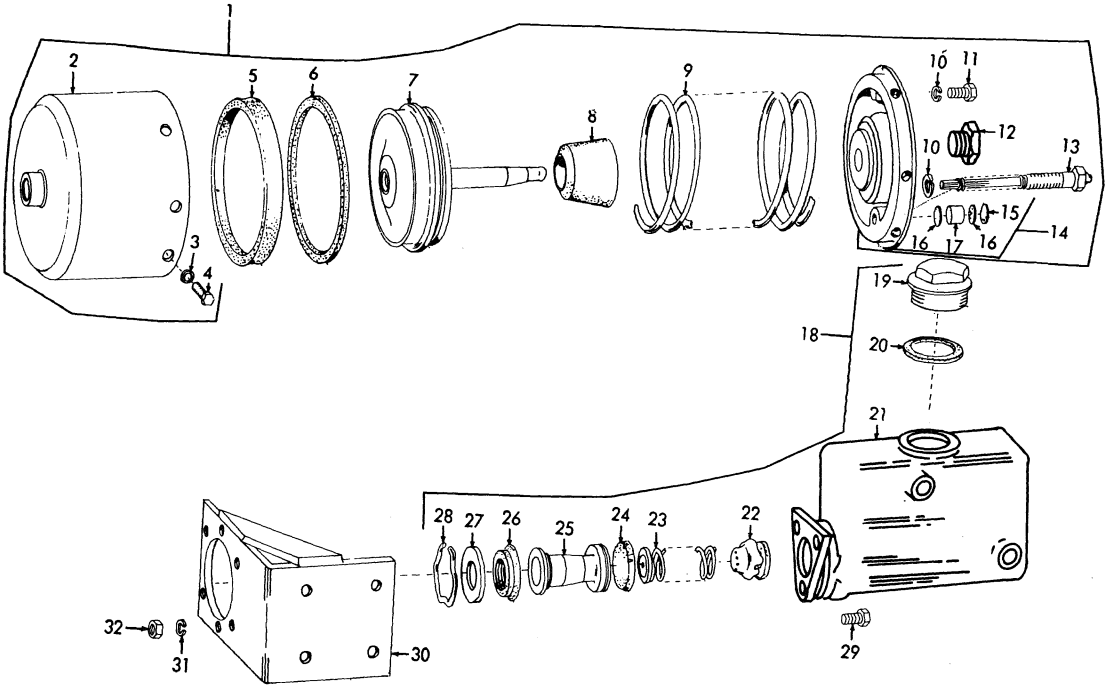

ME 3805-239-20P/119

Figure 119. Rear Power Cluster

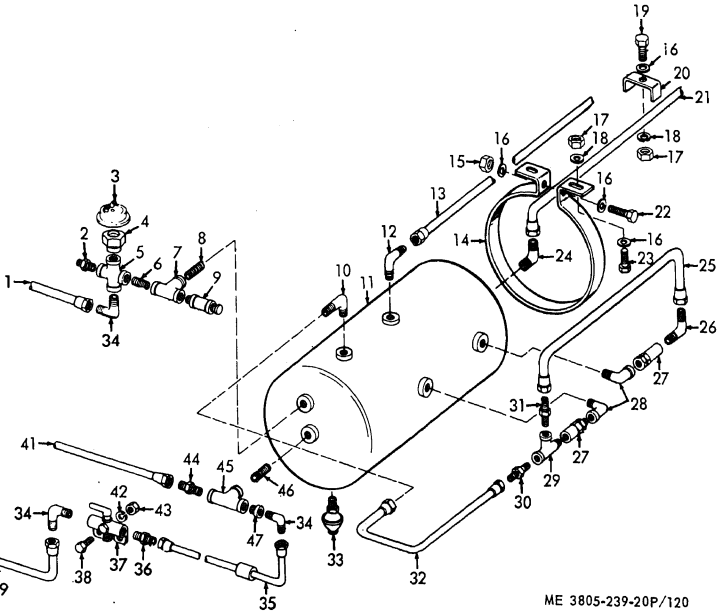

Figure 120. Air Receiver and Lines

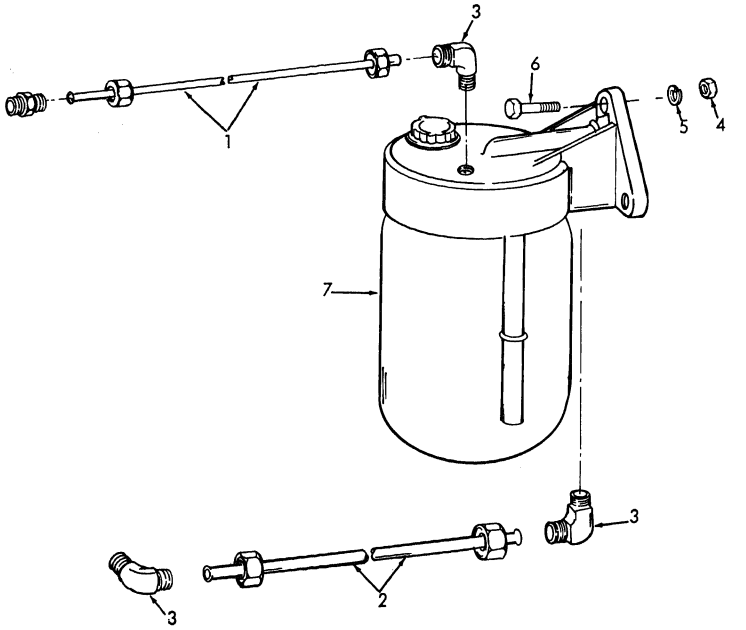

Figure 121. Alcohol Injector and Lines

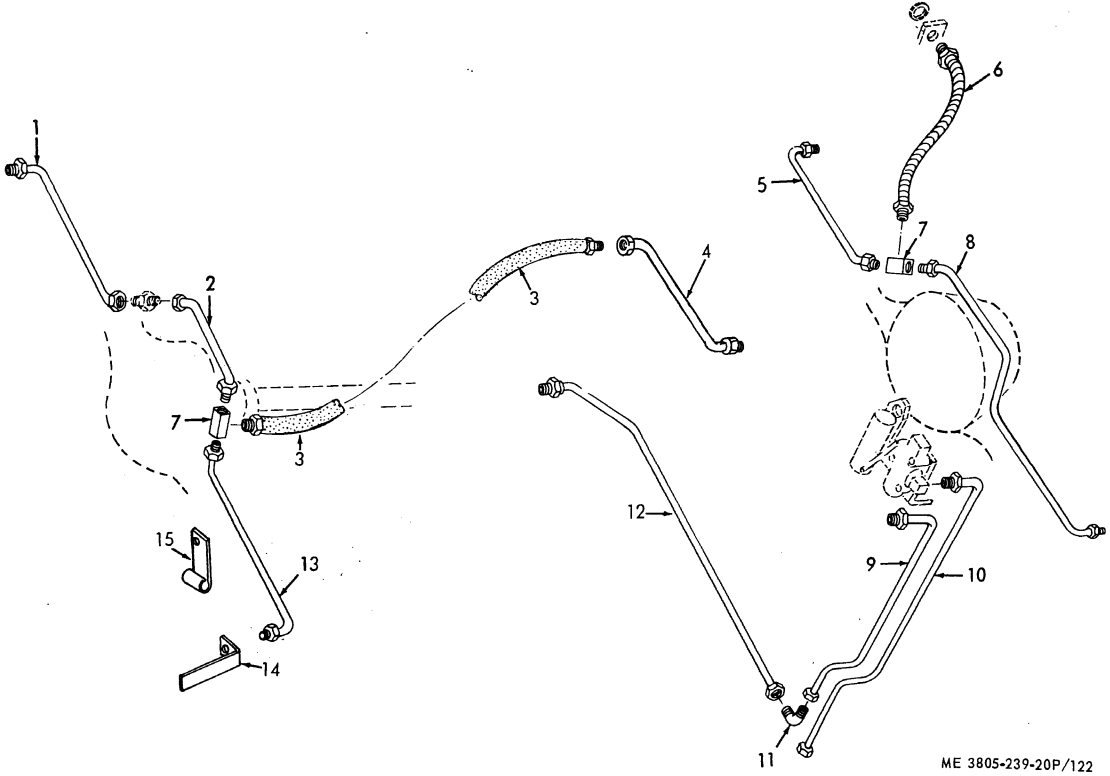

Figure 122. Wheel Brake Lines and Clutch Cut-Off Valve

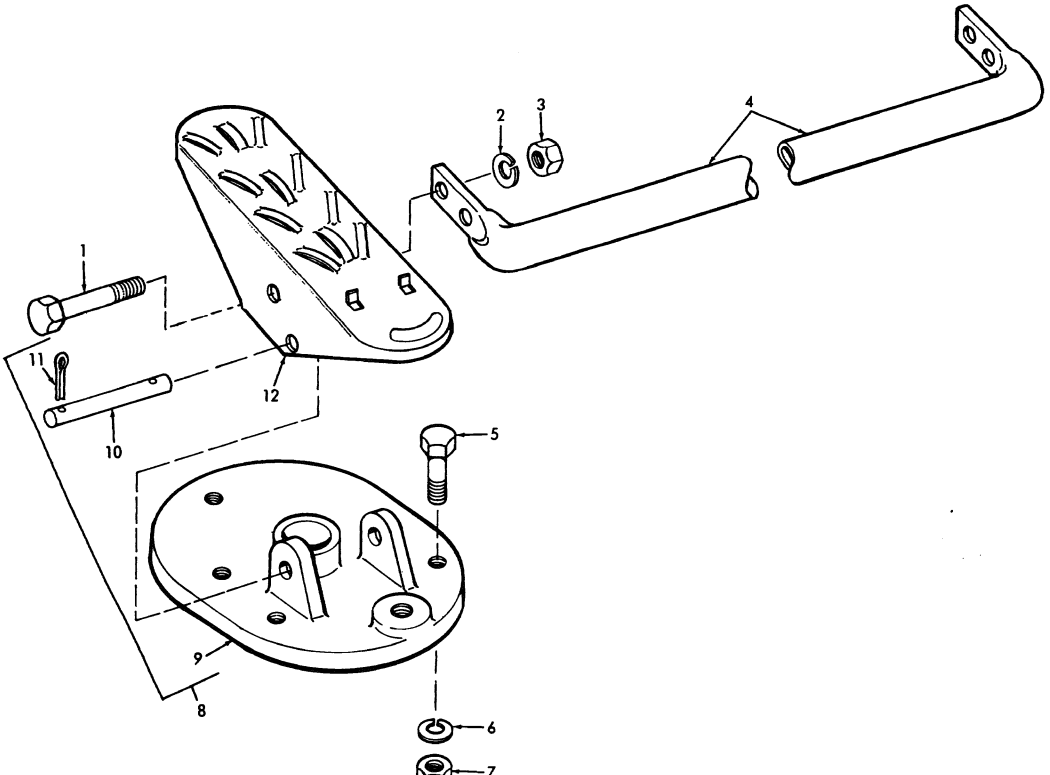

Figure 124. Treadle Valve Connecting Pedal

ME 3805-239-20P/124

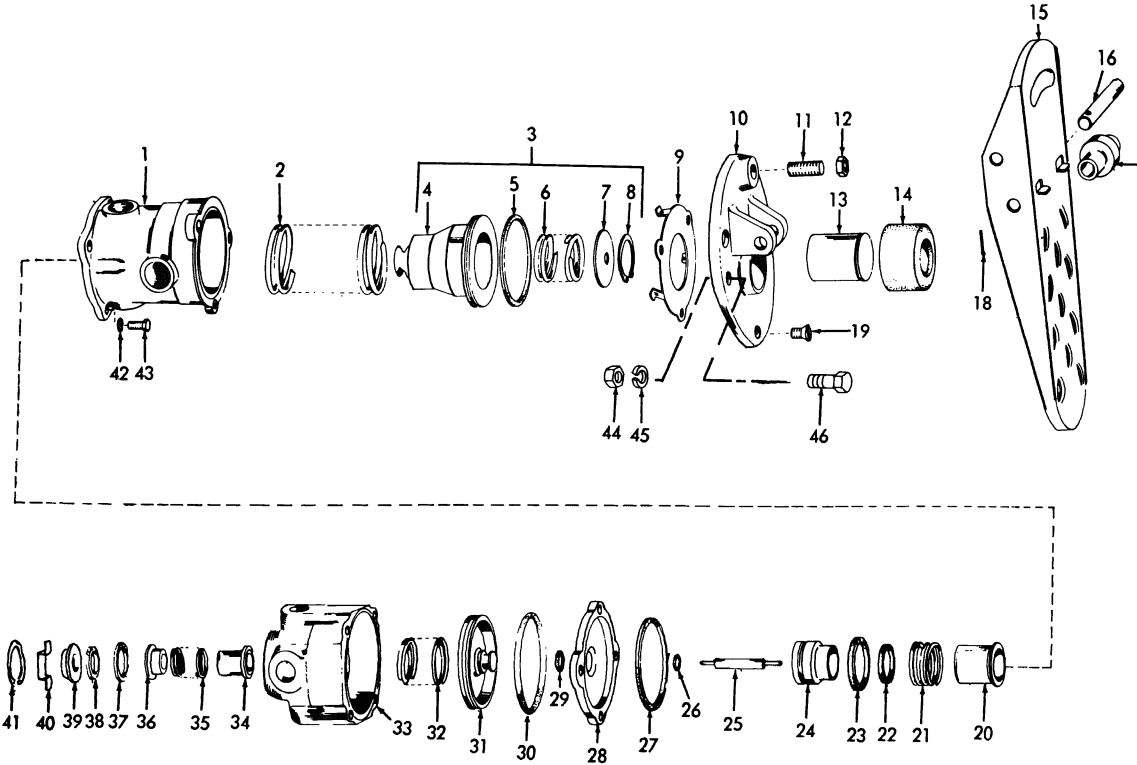

Figure 125. Treadle Valve

ME 3805-239-20P/125

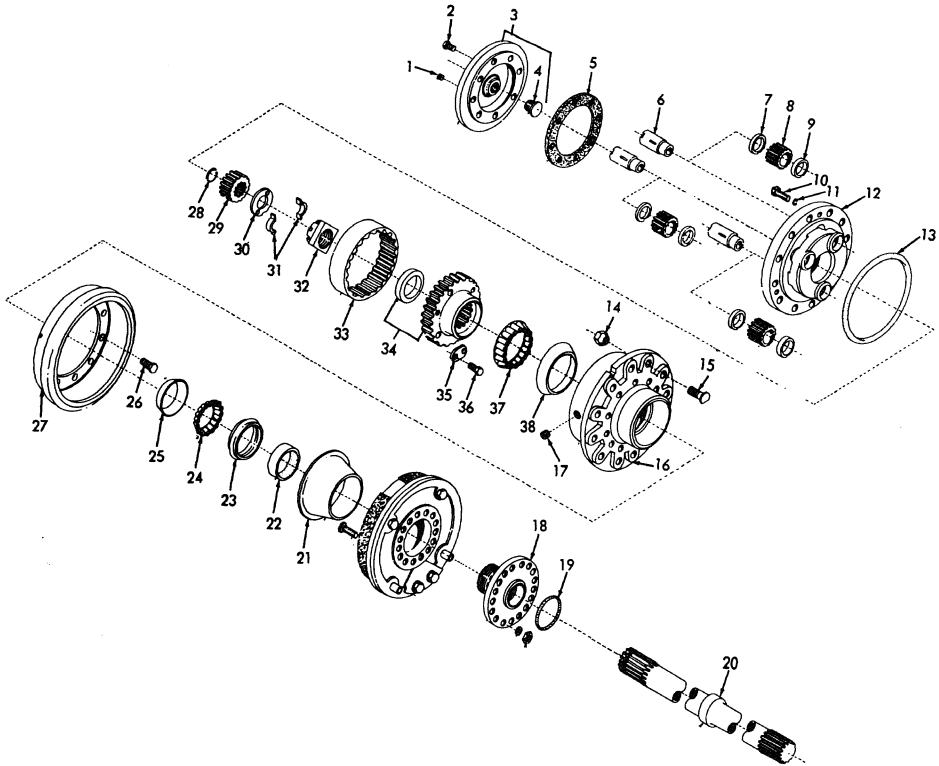

Figure 132. Front Planetary Drive Unit

ME 3805-239-20P/132

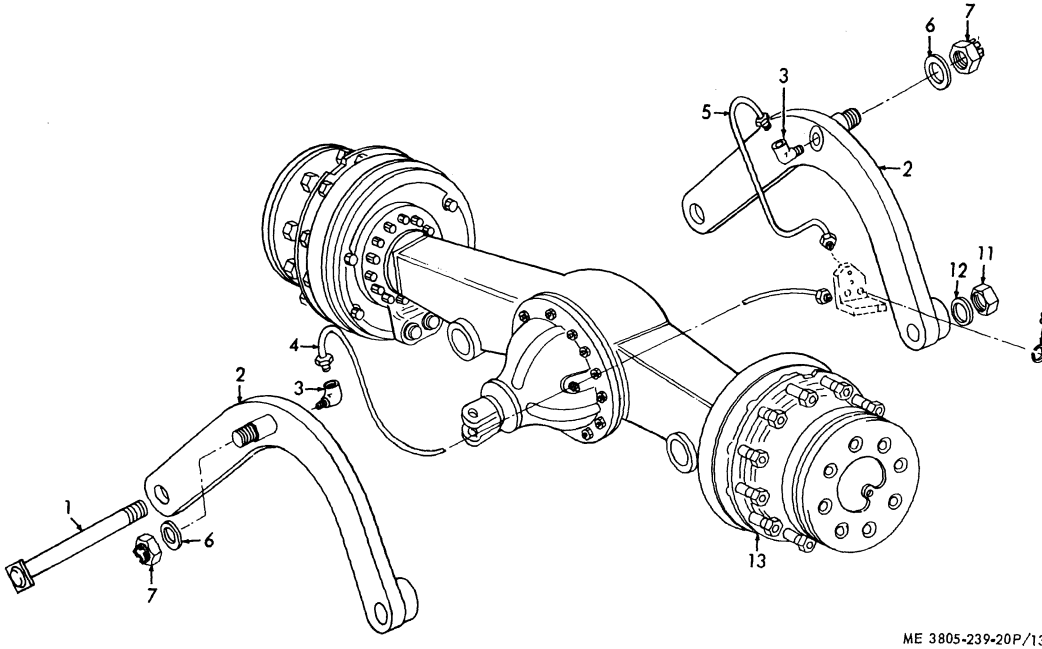

Figure 135. Rear Axle

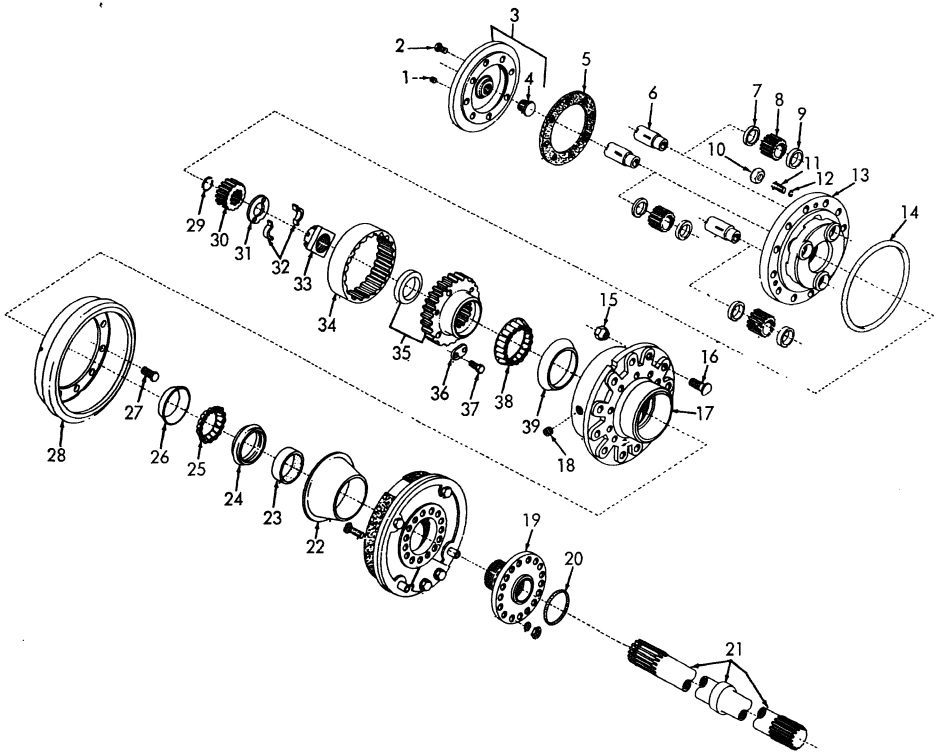

ME 3805-239-20P/136

Figure 136. Rear Planetary Drive Unit

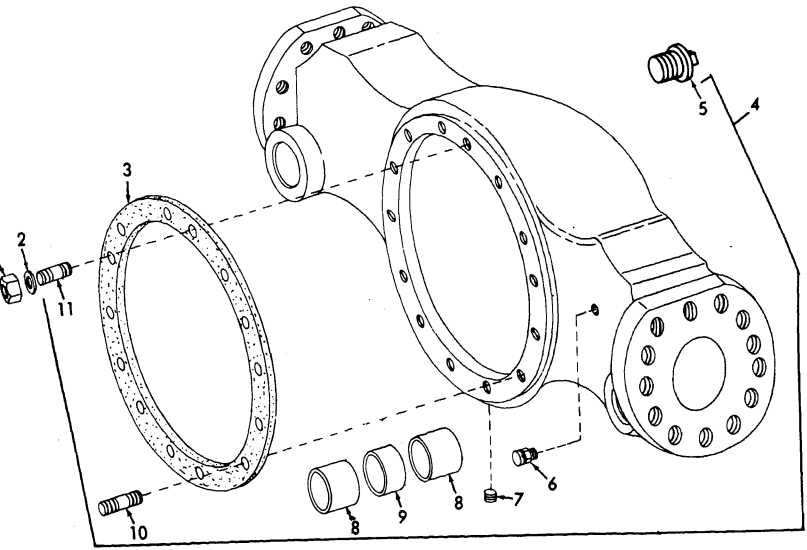

ME 3805-239-20P/138

Figure 138. Rear Axle Housing

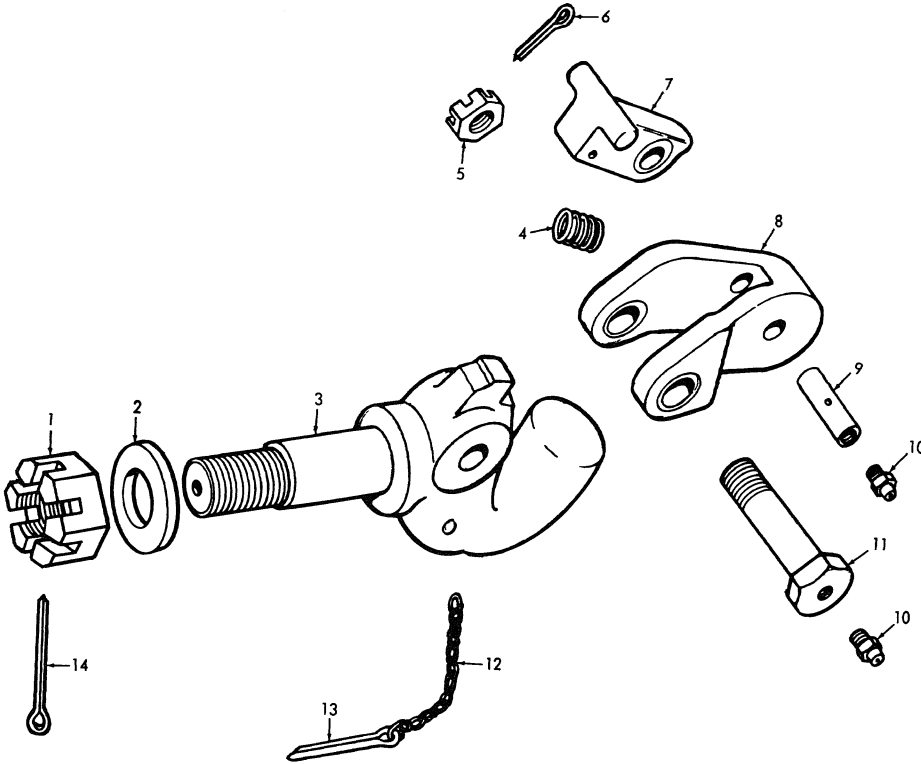

ME 3805-239-20P/139

Figure 139. Pintle Hook

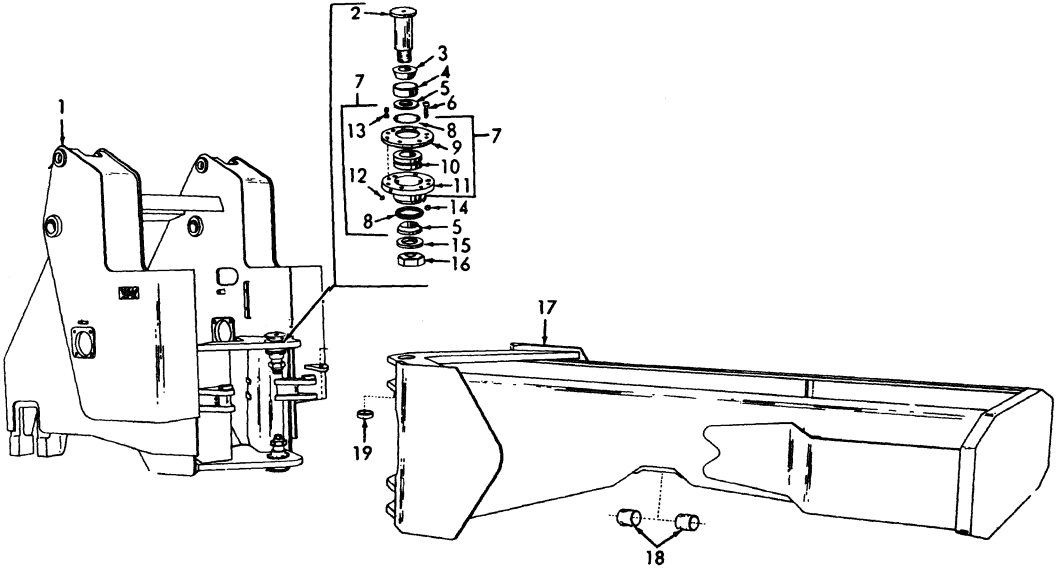

Figure 140. Main Frame

SECTION IV. INDEX-NATIONAL STOCK NUMBER AND REFERENCE NUMBER CROSS-REFERENCE TO FIGURE AND ITEM NUMBER

NATIONAL STOCK NUMBER	FIGURE NO.	ITEM NO.
2510-00-423-0272	30	16
2510-00-427-5689	30	16
2520-00-026-9964	96	4
	97	6
2520-00-080-6924	113	23
2520-00-110-9602	134	2
	138	6
2520-00-112-7210	137	9
2520-00-133-9950	96	14
2520-00-133-9958	96	
2520-00-133-9959	113	11
2520-00-133-9962	95	5
2520-00-133-9963	95	1
2520-00-133-9966	96	13
2520-00-133-9967	11	1
2520-00-352-2168	96	1
	97	3
2520-00-425-3310	96	10
2520-00-496-1228	96	3
	97	5
2520-00-563-2884	133	33
2520-00-895-3230	97	2
2530-00-012-2046	92	13
2520-00-110-9608	94	
2530-00-111-6473	116	5
2530-00-115-0233	120	11
2530-00-115-0235	120	3
2530-00-115-0237	125	17
2530-00-115-0243	91	8
2530-00-133-9970	117	16
2530-00-133-9971	121	7
2530-00-133-9972	91	1
2530-00-225-0708	88	10
2530-00-233-7799	124	4
2530-00-412-1785	116	1
2530-00-419-8688	89	4
2530-00-691-1233	120	37
2530-00-960-9337	89	1
2530-00-970-3444	119	
2530-00-972-8356	114	1
2540-00-115-0512	30	35
2540-00-190-9799	33	1
2540-00-274-4509	139	3
2540-00-771-4880	139	8
2540-00-693-0634	139	9
2540-00-776-0103	139	
2540-00-960-9403	33	2
2540-00-960-9404	33	7
2590-00-050-8821	27	1
2590-00-115-0522	10	22
2590-00-133-9980	10	14
2590-00-133-9981	10	10
2590-00-231-6543	82	4
2590-00-307-8856	79	20
2590-00-752-6286	28	2
2610-00-726-5164	116	9
2640-00-240-2062	116	
2640-00-555-2827		
2815-00-110-9599	76	16
2815-00-100-9600	76	20
2815-00-110-9601	70	7
2815-00-133-9986	47	1
2815-00-133-9988	40	1
2815-00-133-9990	63	3
2815-00-133-9991	63	4
2815-00-133-9993	63	1
2815-00-603-1532	88	9
2815-00-920-6840	40	18
2815-00-930-9320	40	22
2910-00-133-9878	38	9
2910-00-133-9883	46	5
2910-00-133-9884	45	10
2910-00-152-9874	48	1
2910-00-166-4302	77	16
2910-00-166-4303	46	1
2910-00-269-7126	44	14
2910-00-287-1930	45	13

NATIONAL STOCK NUMBER	FIGURE NO.	ITEM NO.
2910-00-352-3024	47	4
2910-00-408-9391	47	16
2910-00-425-0419	78	12
2910-00-492-7306	44	10
	44	12
2910-00-510-6673	44	10
2910-00-646-9727	46	12
2910-00-820-2279	45	12
2910-00-861-6890	45	18
2910-00-930-5797	48	13
2920-00-081-1646	60	5
2920-00-110-9695	60	1
2920-00-111-5194	59	1
2920-00-113-0693	57	12
2920-00-132-8283	79	34
2920-00-133-9885	57	7
2920-00-133-9889	57	14
2920-00-133-9890	58	1
2920-00-133-9891	29	13
2920-00-476-5454	57	4
2920-00-735-9542	81	9
2920-00-891-3838	79	34
2920-00-983-6643	29	3
2930-00-110-9696	79	16
2930-00-111-5192	36	4
2930-00-111-5193	54	13
2930-00-112-0230	56	11
2930-00-133-9892	53	3
2930-00-133-9893	53	1
2930-00-358-5960	36	5
2930-00-409-3879	43	9
2930-00-459-7018	36	4
2930-00-720-2677	36	5
2940-00-112-7804	38	1
2940-00-115-0488	38	10
2940-00-367-0024	70	6
2940-00-371-6579	44	15
2940-00-391-3330	42	6
	42	7
2940-00-401-9429	42	5
2940-00-580-6283	52	4
2940-00-580-6513	42	1
2940-00-603-4555	83	
	140	
2940-00-832-8729	39	8
2940-00-857-1982	39	5
2940-00-901-1286	39	3
2950-00-018-2520	103	2
2950-00-018-2520	103	5
2950-00-689-3106	41	5
2990-00-115-0492	40	4
2990-00-133-9897	64	2
3020-00-114-0988	83	3
3020-00-114-0989	83	5
3020-00-115-8895	57	15
3030-00-920-6712	53	2
3120-00-115-1393	86	8
3120-00-115-1398	15	35
3120-00-115-1399	2	6
3120-00-115-3036	97	15
3120-00-132-6952	101	22
3120-00-132-6953	101	26
3120-00-229-0327	78	14
3120-00-287-6571	15	17
3120-00-294-2219	52	62
3120-00-303-4977	133	10
3120-00-545-3708	137	11
3120-00-681-9867	90	33
3120-00-737-3552	90	40
3120-00-740-9567	126	20
3805-00-010-0199	13	
3805-00-010-0202	14	
3805-00-010-0204	21	3
3805-00-010-0205	12	
3805-00-017-7928	1	12
3805-00-017-8003	1	11
3805-00-043-5343	13	
3805-00-043-5344	12	

SECTION IV. INDEX-NATIONAL STOCK NUMBER AND REFERENCE NUMBER CROSS-REFERENCE TO FIGURE AND ITEM NUMBER

NATIONAL STOCK NUMBER	FIGURE NO.	ITEM NO.
3805-00-066-8793	1	7
3905-00-134-9346	87	4
3805-00-139-4353	3	21
3805-00-140-3862	34	18
3805-00-256-2643	30	20
3805-00-423-0848	1	9
3805-00-454-8102	29	16
	32	2
3805-00-470-6684	1	4
3805-00-482-8932	60	2
3805-00-762-1619	30	8
3805-00-909-6587	1	18
3805-00-927-4961	14	
3805-00-927-4963	1	8
3805-00-999-5905	1	19
3810-00-916-1932	113	22
3830-00-852-5887	5	2
	6	7
	7	27
	12	13
3930-00-060-4196	92	
3930-00-060-4219	92	
3930-00-069-3519	38	
3930-00-828-3556	26	2
3930-00-904-5303	15	29
	101	14
3930-00-969-5543	78	6
4010-00-129-3221	139	12
4210-00-889-2221	140	
4310-00-452-9304	120	9
4320-00-656-7471	10	18
4330-00-168-1861	10	32
4330-00-168-1828	100	6
4330-00-217-3588	100	11
4710-00-115-0489	44	19
	77	25
4710-00-115-0490	77	14
4710-00-115-0491	45	5
4710-00-115-0493	99	3
4710-00-115-0494	117	9
4710-00-115-0495	117	2
4710-00-115-0496	122	4
4710-00-115-0499	122	9
4710-00-115-0501	122	10
4710-00-115-0502	122	12
4710-00-115-0503	83	25
	121	1
4710-00-115-0506	6	11
4710-00-115-0507	6	12
4710-00-115-0508	6	18
4710-00-115-0509	6	4
4710-00-115-0510	6	1
4710-00-115-0524	7	22
4710-00-115-0525	7	24
4710-00-115-0526	7	25
4710-00-115-0527	8	2
4710-00-115-0528	7	8
4710-00-115-0529	7	12
4710-00-115-0530	7	28
4710-00-143-8989	47	12
4710-00-143-8991	122	13
4710-00-143-8992	122	8
4710-00-143-8993	122	1
4710-00-143-8994	6	3
4710-00-168-1810	9	5
4710-00-168-1813	7	9
4710-00-168-1814	47	7
4710-00-168-1815	47	8
4710-00-168-1817	7	15
4710-00-168-1818	10	4
4710-00-168-1819	5	12
4710-00-168-1820	9	8
4710-00-168-1821	12	24
4710-00-168-1822	10	8
4710-00-168-1823	47	13
4710-00-168-1824	7	21
4710-00-168-1825	47	10

NATIONAL STOCK NUMBER	FIGURE NO.	ITE NO
4710-00-168-1844	5	13
	5	14
4710-00-168-1845	5	10
4710-00-168-1846	7	26
4710-00-168-1847	7	20
4710-00-168-1849	7	2
4710-00-168-1850	5	9
4710-00-168-1851	5	11
4710-00-168-1852	47	9
4710-00-168-1854	47	6
4710-00-168-1862	117	4
4710-00-277-5529	120	
	140	
4720-00-110-1944	36	2
4710-00-401-9416	40	6
4710-00-401-9417	4	8
4710-00-408-4593	121	2
4710-00-930-9371	40	11
4720-00-110-1942	44	2
4720-00-110-1943	77	21
4710-00-277-7581	48	
4710-00-110-1945	56	6
4720-00-110-1946	36	13
4720-00-110-1947	99	
4720-00-110-3662	38	8
4720-00-110-3663	40	3
4720-00-110-3664	40	20
4720-00-110-3665	77	5
4720-00-110-3666	99	16
4720-00-113-5484	42	
	140	
4720-00-114-0986	120	35
4720-00-114-0987	120	41
4720-00-115-0229	77	23
4720-00-115-0234	120	39
4720-00-115-0248	4	1
4720-00-489-5871	38	16
4720-00-541-8859	83	
4720-00-639-9899	5	
	6	
	7	
	8	
	140	
4720-00-640-0362	9	
4720-00-630-5439	10	6
4720-00-824-4373	99	
	140	
4720-00-930-4509	92	
	140	
4720-00-930-4515	92	
	140	
4720-00-930-5389	5	
	5	21
	7	
	8	
	140	
4730-00-012-7951	63	5
4730-00-014-3985	134	9
	138	5
4730-00-018-9566	96	7
	112	26
	113	2
4730-00-044-4614	45	11
4730-00-044-4619	40	27
	68	9
4730-00-044-4655	132	1
	136	1
4730-00-044-4854	64	3
	76	4
4730-00-044-5751	56	14
4730-00-050-4203	139	10
4730-00-050-4208	1	21
	3	16
	14	1
	93	20
	97	1
	135	10
	140	12
4730-00-068-8333	83	31

SECTION IV. INDEX-NATIONAL STOCK NUMBER AND REFERENCE NUMBER CROSS-REFERENCE TO FIGURE AND ITEM NUMBER

NATIONAL STOCK NUMBER	FIGURE NO.	ITEM NO.
730-00-072-4877	81	13
730-00-088-8833	83	31
730-00-111-2505	47	11
730-00-111-2506	45	4
730-00-111-2507	45	9
730-00-111-2508	77	27
730-00-111-2509	56	5
730-00-111-2511	134	
730-00-111-2511	138	7
730-00-111-2513	132	17
	136	18
730-00-111-2519	116	3
730-00-114-0992	7	18
730-00-115-0227	38	11
730-00-136-1889	77	30
730-00-168-1840	40	5
730-00-168-1842	99	18
730-00-172-0010	95	10
	96	5
730-00-172-0028	2	9
730-00-172-0034	93	14
730-00-172-8764	40	21
730-00-187-4241	113	7
730-00-192-9450	83	42
730-00-192-9450	120	6
	120	8
730-00-203-3551	5	
	6	
	7	
730-00-225-0710	88	14
730-00-231-3014	42	10
730-00-231-3015	42	22
730-00-231-3016	4	5
730-00-254-6226	44	3
730-00-263-3123	76	29
730-00-263-4976	121	3
730-00-274-9258	49	2
730-00-277-8266	120	34
730-00-277-8273	122	11
730-00-278-3828	117	8
	120	10
	120	12
	120	24
	120	26
730-00-278-3862	99	7
730-00-278-4216	81	11
730-00-278-7778	120	5
730-00-278-8767	117	
	120	
730-00-278-8886	117	6
730-00-279-0137	120	47
730-00-287-1543	117	
	120	
730-00-287-1649	38	15
730-00-287-1707	117	3
	122	7
730-00-289-2368	44	1
730-00-289-2379	40	25
730-00-289-2830	120	4
730-00-289-5895	83	9
730-00-391-3771	83	44
730-00-403-0885	117	13
730-00-406-6780	65	7
730-00-415-3172	40	14
730-00-430-4390	49	1
	83	18
730-00-433-9087	42	
730-00-470-6419	10	3
730-00-489-5799	117	15
730-00-496-7337	83	17
730-00-537-1192	45	19
730-00-568-4131	40	10
730-00-595-2628	120	30
730-00-640-6330	44	9
730-00-702-2750	10	5
	83	26
730-00-738-7543	5	

NATIONAL STOCK NUMBER	FIGURE NO.	ITEM NO.
	6	
	6	19
	8	
4730-00-738-7548	8	
4730-00-761-2955	99	21
4730-00-814-4132	46	3
4730-00-834-5151	113	1
4730-00-838-2378	38	17
4730-00-848-7131	40	13
4730-00-853-1182	92	9
4730-00-909-8627	40	2
4730-00-915-5477	99	19
4730-00-930-4524	7	
4730-00-933-0742	92	2
4730-00-937-0492	99	
4730-00-937-0808	44	17
4730-00-952-0038	92	
4730-00-984-7175	56	13
4730-00-985-0642	47	3
4730-00-985-0758	38	19
4820-00-112-0071	76	13
4820-00-112-0072	36	11
4820-00-115-0228	38	20
4820-00-115-0230	46	6
4820-00-115-0247	10	34
4820-00-142-3036	120	33
4820-00-133-9974	120	27
4820-00-174-0325	77	26
4820-00-849-1220	77	29
5305-00-008-2084	34	3
5305-00-012-1832	24	7
5305-00-042-4506	27	3
5305-00-042-6417	10	2
	21	1
	33	21
	66	10
	94	
5305-00-059-4550	126	19
	125	9
5305-00-066-0498	82	2
5305-00-068-0502	38	6
	59	2
5305-00-068-0506	79	28
5305-00-068-0506	81	7
5305-00-069-5571	77	7
5305-00-069-5572	45	3
5305-00-069-5574	5	24
	8	3
	43	7
	83	38
	90	47
5305-00-068-5580	56	3
5305-00-071-2066	102	1
5305-00-071-2235	100	17
5305-00-071-2242	47	19
	82	8
5305-00-104-3573	90	38
5305-00-206-0996	15	2
	15	2
	15	7
	30	6
5305-00-207-2279	1	15
5305-00-225-3839	46	7
5305-00-225-9081	42	14
	47	24
5305-00-226-7768	5	17
5305-00-252-5330	1	16
5305-00-253-5615	29B	4
5305-00-267-8974	120	38
5305-00-267-8977	28	1
	121	6
5305-00-269-2801	124	1
5305-00-269-2803	6	16
	8	8
	30	4
	30	28
	30	29

SECTION IV. INDEX-NATIONAL STOCK NUMBER AND REFERENCE NUMBER CROSS-REFERENCE TO FIGURE AND ITEM NUMBER

NATIONAL STOCK NUMBER	FIGURE NO.	ITEM NO.
	31	3
	38	21
	118	29
	119	29
5305-00-269-2805	10	35
	33	12
5305-00-269-2807	10	11
5305-00-269-2808	114	23
5305-00-269-2814	5	16
	98	7
5305-00-269-3208	33	6
	45	6
	113	3
5305-00-269-3209	6	9
	7	5
	7	13
	15	31
	24	12
	29	12
	32	4
	34	17
	65	8
	70	15
	81	14
	90	44
	92	6
5305-00-269-3210	42	17
	65	6
	76	19
	85	2
	113	15
5305-00-269-3211	6	5
	31	6
5305-00-269-3211	40	8
	65	2
	73	11
	99	13
	112	3
5305-00-269-3212	54	11
	64	4
5305-00-269-3214	15	32
	36	14
	54	7
	76	22
	100	13
5305-00-269-3215	30	11
5305-00-269-3216	29A	14
5305-00-716-8181	2	8
	107	13
5305-00-725-4098	101	28
5305-00-725-4105	34	12
5305-00-725-4187	30	17
	91	15
5305-00-727-3804	60	4
5305-00-781-3924	29	10
	99	5
5305-00-846-5703	43	13
	78	2
	94	1
5305-00-855-0959	89	5
5305-00-899-3002	24	9
5305-00-912-4819	44	4
5305-00-961-6507	39	4
5305-00-983-7452	7	16
5305-00-984-6211	140	
5306-00-018-0084	48	15
5306-00-089-1530	29	18
5306-00-225-8498	83	34
5306-00-225-8500	57	6
5306-00-225-8504	83	29
5306-00-225-9084	95	7
	96	2
	97	4
5306-00-225-9088	100	18
5306-00-225-9089	33	8
	114	18
	120	23

NATIONAL STOCK NUMBER	FIGURE NO.	I N.
	125	46
5306-00-225-9094	114	24
	120	19
5306-00-225-9097	120	22
5306-00-717-9637	1	10
5307-00-115-1552	40	17
5310-00-011-4380	100	8
5310-00-012-0367	120	43
	121	4
5310-00-045-3299	24	8
	61	33
5310-00-050-3520	139	5
5310-00-056-3395	29A	15
5310-00-068-8067	91	14
5310-00-080-6004	18	2
	29	1
	29	22
	30	3
	30	23
	30	27
	32	5
	33	5
	38	22
	40	30
	49	11
	54	9
	55	4
	64	6
	65	4
	70	12
	73	5
	73	16
5310-00-081-4219	42	13
	57	3
	100	3
	114	17
5310-00-087-7493	34	6
5310-00-110-2761	54	2
5310-00-115-6215	96	11
5310-00-115-6224	57	17
5310-00-115-6231	1	13
5310-00-115-6233	40	15
5310-00-115-6241	96	12
5310-00-119-1639	97	13
5310-00-350-2655	25	9
5310-00-350-4439	96	9
5310-00-400-8504	3	6
5310-00-594-8038	132	14
	136	15
5310-00-637-0244	135	9
5310-00-637-9541	6	6
	5	5
	7	14
	12	14
	15	3
	18	3
	30	2
	30	10
	30	22
	30	26
	31	2
	32	6
	33	14
	38	23
	40	7
	54	8
	54	10
	57	5
	57	8
	65	3
	75	2
	5	5
	7	4
	10	12
	11	6
	24	11
	29	14
	29	21

NATIONAL STOCK NUMBER	FIGURE NO.	ITEM NO.
	34	5
	40	29
	42	16
	43	12
	44	21
	45	7
	49	4
	49	12
	53	5
	64	5
	70	11
	73	4
	76	18
	77	12
	81	15
0-00-723-4458	47	18
0-00-732-0560	101	25
0-00-763-8920	1	14
0-00-777-6325	26	7
0-00-784-3153	61	29
	62	34
0-00-809-3078	46	8
	117	10
0-00-809-4058	81	8
0-00-809-4085	45	1
0-00-809-8533	15	38
0-00-809-8541	101	11
0-00-820-6652	29A	16
0-00-820-6653	60	3
	26	6
0-00-823-8803	34	14
	91	10
0-00-833-8567	25	5
0-00-879-6493	90	20
0-00-971-7989	78	8
0-00-982-6809	30	14
	34	13
	37	9
	77	32
	113	26
0-00-984-3807	102	5
5-00-010-3496	101	18
	114	7
5-00-012-0123	83	2
5-00-115-1487	3	19
5-00-115-1488	124	10
5-00-115-1489	3	12
5-00-115-1491	15	18
5-00-115-1498	3	20
5-00-115-6267	15	12
5-00-115-6299	2	1
5-00-236-8353	78	4
5-00-236-8353	125	18
5-00-236-8359	114	6
5-00-298-1481	91	12
	101	20
5-00-298-1499	139	6
5-00-781-6532	101	29
5-00-839-5822	1	1
	15	14
	92	10
5-00-849-5582	139	14
5-00-928-7125	1	2
5-00-930-6042	1	23
5-00-932-0857	1	3
5-00-935-8995	1	22
0-00-110-5685	5	3
	6	8
	7	1
	12	12
0-00-110-5689	54	3
0-00-110-5692	40	26
0-00-110-5693	97	14
0-00-110-5694	100	12
0-00-110-5698	91	9
0-00-110-8744	54	4
0-00-110-8756	127	14
0-00-115-1456	10	9
0-00-115-1457	9	1

NATIONAL STOCK NUMBER	FIGURE NO.	ITEM NO.
5330-00-115-1467	10	17
5330-00-115-6171	89	3
5330-00-128-1170	50	
5330-00-143-8666	137	32
5330-00-291-4645	118	20
	119	20
5330-00-291-8977	84	6
5330-00-311-5189	24	3
5330-00-311-5305	95	4
	98	8
5330-00-402-5849	83	22
5330-00-422-7694	86	7
5330-00-484-1702	41	7
5330-00-506-3975	52	13
5330-00-531-3197	52	13
5330-00-550-7312	44	13
5330-00-663-4773	45	15
5330-00-718-7385	42	3
5330-00-737-4265	112	22
5330-00-757-1580	52	8
5330-00-770-9136	14	2
5330-00-770-9138	14	10
5330-00-787-8724	113	
5330-00-804-5695	77	31
5330-00-876-8739	102	
5330-00-920-6835	70	4
5330-00-929-9049	99	20
	99	22
5330-00-930-5793	56	9
5330-00-932-0860	85	20
	113	9
5330-00-932-0864	111	3
5330-00-936-5239	73	14
5330-00-947-3579	99	1
5330-00-964-0096	132	13
5330-00-964-6318	39	6
5330-00-972-8204	116	6
5330-00-990-9007	85	20
5340-00-110-5680	47	2
5340-00-110-5700	116	7
5340-00-110-5701	116	8
5340-00-115-1469	15	13
5340-00-115-6126	47	15
5340-00-133-3660	120	14
5340-00-276-5853	40	31
5340-00-351-0183	114	8
5340-00-446-3269	36	7
5340-00-592-7996	82	
5340-00-704-9603	139	7
5340-00-738-7552	88	2
5340-00-891-6136	47	21
5340-00-933-0698	39	2
5340-00-955-0319	79	2
5355-00-812-4141	101	1
5360-00-079-1940	88	5
5360-00-225-0706	88	3
5360-00-225-0709	88	11
5360-00-292-3004	127	6
5360-00-598-9900	76	8
5360-00-784-0348	50	23
5360-00-816-8227	50	44
5365-00-090-5426	82	
5365-00-098-2201	90	
5365-00-215-7421	83	20
5365-00-772-2323	82	
5365-00-784-0042	45	15
5905-00-134-9821	82	13
5925-00-111-5063	79	19
5925-00-283-6511	79	12
5925-00-520-4666	82	7
5930-00-296-6318	79	18
5930-00-485-9000	81	2
5930-00-501-1707	81	12
5930-00-688-9882	81	1
5935-00-111-8416	24	5
5935-00-333-9414	82	
5935-00-572-9180	25	4

SECTION IV. INDEX-NATIONAL STOCK NUMBER AND REFERENCE NUMBER CROSS-REFERENCE TO FIGURE AND ITEM NUMBER

NATIONAL STOCK NUMBER	FIGURE NO.	ITEM NO.
935-00-686-2599	82	
935-00-686-2600	82	
935-00-771-6884	82	
935-00-772-3309	82	
935-00-807-4109	25	7
935-00-811-0942	82	
935-00-814-7432	82	9
940-00-246-4891	29	6
945-00-409-3883	82	12
975-00-771-6634	82	
140-00-057-2554	29	25
140-00-135-0223	29	5
140-00-135-0224	29	24
140-00-135-0225	29	7
210-00-800-4776	79	8
220-00-337-6471	23	1
220-00-368-4945	23	8
	24	6
220-00-678-9046	25	1
220-00-693-4175	25	12
220-00-695-1107	25	2
220-00-752-6018	23	2
220-00-788-9943	26	3
220-00-819-7028	25	3
220-00-880-1237	24	1

NATIONAL STOCK NUMBER	FIGURE NO.	ITEM NO.
6220-00-903-6647	24	
6220-00-904-0156	24	
6220-00-953-4652	26	
6220-00-953-4653	26	
6240-00-019-0877	23	4
6240-00-019-3093	79	6
6240-00-044-6914	24	10
6240-00-295-2668	24	4
6240-00-553-1038	79	9
6240-00-727-8573	26	4
6250-00-353-0955	23	5
6350-00-899-4527	79	15
6620-00-869-7247	79	25
6620-00-954-8686	56	16
6625-00-168-0488	79	32
6645-00-089-8842	80	7
6680-00-113-0728	76	1
6680-00-115-0523	10	
6680-00-465-1574	77	
6685-00-133-7521	79	
6685-00-133-7522	79	
6685-00-453-9013	79	
6810-00-249-9354	29	
9905-00-205-2795	35	1

REFERENCE NO.	MFG CODE	FIGURE NO.	ITEM NO.
0517C8-C	92392	140	
A1049-14	70417	15	17
23540	63477	120	27
31768	63477	124	10
	63477	125	16
42170	63477	125	17
70128	17460	117	16
48362	63477	124	12
	63477	125	15
737NM46	88044	83	9
4	05657	40	19
898F1072	79780	134	2
	79780	138	6
82706	00000	95	2
	06229	82	
A1219	02892	94	
58N4	79780	95	6
6N	70960	96	1
	70960	97	3
2032	76359	33	7
2080-88	76359	33	3
2106	76359	33	2
2171	63477	124	9
30-29	13829	21	3
27-61	76359	33	1
2685	92392	79	5
2687	74400	79	3
2689	74400	79	2
2691	92392	79	4
2860	76359	33	6
107-10	01276	140	
107-12	01276	140	
18299	17460	118	19
	17460	119	19
5922	17460	118	20
	17460	119	20
9434-16-94	01276	7	
9436-16-94	01276	5	
	01276	8	
9436-2016-94	01276	8	
9437-2016-94	01276	8	
9439-2016-94	01276	8	
9440	01276	8	
E7	57448	78	14
G12-0061	18265	38	28
808	06631	83	7
10921	21102	44	12
2420	99103	99	18
642-7	76005	36	7
1056	61112	46	11
2773-15	61112	46	5
2814	61112	46	
2974R	61112	46	
3235-9	61112	46	6
3864R72	61112	46	1
535-1	61112	46	12
24N901G	94990	57	12
1044LN10	96906	30	14
15001-1	96906	139	10
15002-1	96906	95	10
	96906	96	5
15003-1	96906	14	1
	96906	97	1
	96906	135	10
	96906	140	12
15006-6	96906	93	14
15795-12	96906	120	16
15795-14	96906	29	1
	96906	29	22
	96906	30	3
	96906	30	23
	96906	30	27
	96906	32	5
	96906	34	6
	96906	38	22
	96906	70	12
	96906	77	10

REFERENCE NO.	MFG CODE	FIGURE NO.	ITEM NO.
	96906	101	24
MS15795-15	96906	31	8
	96906	33	13
MS15795-15	96906	36	15
MS15795-19	96906	33	20
	96906	36	9
MS15795-20	96906	91	10
MS15795-31	96906	139	2
MS15975-15	96906	15	4
MS16203-15	96906	57	1
MS16562-161	96906	101	29
MS16998-78	96906	7	16
MS17829-8F	96906	91	14
MS20364-524A	96906	120	15
MS20822-10	96906	42	10
MS20822-10-12	96906	42	22
MS21044LN10	96906	77	32
MS21044N8	96906	36	10
MS21920-28R	96906	38	17
MS21920-39	96906	38	19
MS24629-41	96906	89	5
MS24665-303	96906	124	11
MS24665-306	96906	78	4
	96906	125	18
MS24665-353	96906	1	1
	96906	15	14
	96906	92	10
MS24665-355	96906	83	2
MS24665-357	96906	91	12
	96906	101	20
MS24665-360	96906	139	6
MS24665-370	96906	114	6
MS24665-502	96906	139	14
MS27183-10	96906	81	8
MS27183-11	96906	46	8
	96906	117	10
MS27183-12	96906	42	13
	96906	57	3
	96906	100	3
	96906	114	17
MS27183-14	96906	33	5
	96906	40	16
	96906	40	30
	96906	54	9
	96906	64	6
MS27183-16	96906	45	1
MS27183-22	96906	30	13
MS27183-23	96906	15	38
MS27183-27	96906	101	11
MS28778-6	96906	77	31
MS35000-3	96906	29	25
MS35206-242	96906	23	6
	96906	24	9
MS35276-276	96906	44	4
MS35295-71	96906	54	12
MS35297-111	96906	9	4
MS35297-73	96906	57	10
MS35297-83	96906	77	7
MS35297-86	96906	56	7
MS35297-91	96906	54	1
MS35298-116	96906	36	6
MS35298-64	96906	38	14
	96906	44	22
MS35301-62	96906	5	4
	96906	11	5
	96906	12	15
	96906	29	23
	96906	40	28
	96906	77	9
	96906	99	12
MS35304-74	96906	53	6
MS35337-25	96906	120	42
MS35338-10	96906	2	5
	96906	9	3
	96906	10	1
	96906	11	8
	96906	21	2

SECTION IV. INDEX-NATIONAL STOCK NUMBER AND REFERENCE NUMBER CROSS-REFERENCE TO FIGURE AND ITEM NUMBER

REFERENCE NO.	MFG CODE	FIGURE NO.	ITEM NO.
	96906	30	18
MS35338-10	96906	33	18
	96906	94	
	96906	99	4
	96906	101	23
MS35338-12	96906	26	6
	96906	101	27
	96906	135	8
MS35338-4	96906	92	7
MS35338-42	96906	24	8
MS35338-46	96906	6	6
	96906	7	14
	96906	12	14
	96906	15	3
	96906	30	2
	96906	30	10
	96906	30	22
	96906	30	26
	96906	30	32
	96906	31	2
	96906	32	6
	96906	33	14
	96906	99	11
	96906	100	14
	96906	101	5
	96906	113	14
	96906	114	4
	96906	124	2
MS35338-5	96906	44	6
MS35338-6	96906	121	5
	96906	140	
MS35338-60	96906	60	3
MS35338-7	96906	33	10
	96906	42	12
	96906	47	22
	96906	48	14
	96906	57	2
	96906	83	33
	96906	100	2
	96906	114	2
	96906	114	15
	96906	120	18
	96906	124	6
MS35338-8	96906	7	4
	96906	10	12
	96906	11	6
	96906	34	5
MS35338-9	96906	5	25
MS35387-1	96906	35	1
MS35388-4	96906	101	31
MS35425-28	96906	29	2
MS35478-1683	96906	24	10
MS35478-1691	96906	24	4
MS35650-102	96906	44	7
MS35690-404	96906	47	18
MS35690-425	96906	28	4
	96906	120	43
	96906	121	4
MS35690-502	96906	42	11
	96906	47	23
MS35690-522	96906	33	11
MS35690-525	96906	100	1
	96906	114	3
	96906	114	14
	96906	120	17
	96906	124	7
MS35690-605	96906	4	3
	96906	11	7
	96906	29	15
	96906	29	20
	96906	31	5
	96906	70	10
	96906	77	13
	96906	78	1
MS35690-825	96906	2	4
	96906	11	9
	96906	30	19

REFERENCE NO.	MFG CODE	FIGURE NO.
MS35691-5	96906	78
MS35691-525	96906	114
MS35691-625	96906	5
	96906	30
	96906	30
	96906	30
MS35691-625	96906	30
	96906	31
	96906	33
	96906	34
	96906	38
	96906	38
	96906	44
	96906	101
	96906	114
	96906	124
MS35691-65	96906	8
MS35691-725	96906	78
	96906	114
MS35691-825	96906	11
	96906	15
MS35770-9	96906	56
MS35842-13	96906	40
MS35842-3	96906	10
	96906	56
	96906	83
	96906	99
MS39061-1	96906	79
MS39230-1	96906	38
MS51113-1	96906	79
MS51318-1	96906	25
MS51373-1	96906	116
MS51922-12	96906	102
MS51967-13	96906	33
MS51967-20	96906	1
MS51968-14	96906	101
MS51972-7	96906	26
MS521318-21	96906	298
MS75004-2	96906	29
MS75058-1	96906	82
MS90725-1	96906	82
MS90725-107	96906	29
	96906	99
MS90725-112	96906	63
MS90725-113	96906	21
	96906	33
	96906	94
MS90725-121	96906	10
MS90725-16	96960	100
MS90725-165	96906	60
MS90725-33	96906	83
MS90725-35	96906	57
MS90725-36	96906	42
	96906	47
MS90725-40	96906	83
MS90725-57	96906	33
	96906	45
MS90725-58	96906	6
	96906	7
	96906	7
	96906	15
	96906	24
	96906	29
	96906	32
	96906	34
	96906	70
	96906	81
	96906	92
MS90725-59	96906	42
	96906	113
MS90725-6	96906	59
MS90725-60	96906	6
	96906	31
	96906	40
	96906	99
MS90725-61	96906	54
		64
MS90725-63	96906	57

CROSS-REFERENCE TO FIGURE AND ITEM NUMBER

REFERENCE NO.	MFG CODE	FIGURE NO.	ITEM NO.
MS90725-64	96906	15	32
	96906	36	14
MS90725-64	96906	54	7
	96906	76	22
	96906	100	13
MS90725-65	96906	30	11
MS90725-8	96906	46	7
MS90725-84	96906	45	3
MS90725-86	96906	5	24
MS90725-9	96906	47	19
	96906	82	8
MS90725-96	96906	56	3
MS90726-10	96906	28	1
	96906	121	6
MS90726-114	96906	91	15
MS90726-115	96906	5	17
MS90726-118	96906	2	8
MS90726-14	96906	30	17
MS90726-160	96906	101	28
MS90726-164	96906	34	12
MS90726-29	96906	95	7
	96906	96	2
	96906	97	4
MS90726-33	96906	100	18
MS90726-34	96906	33	8
	96906	34	7
	96906	114	18
	96906	120	23
	96906	124	5
MS90726-39	96906	114	24
	96906	120	19
MS90726-42	96906	120	22
MS90726-58	96906	124	1
MS90726-6	96906	38	6
	96906	79	28
	96906	81	7
MS90726-60	96906	6	16
	96906	8	8
	96906	30	4
	96906	30	28
	96906	30	29
	96906	30	30
	96906	31	3
	96906	38	21
MS90726-62	96906	10	35
	96906	33	12
MS90726-64	96906	10	11
MS90726-65	90906	114	23
MS90726-66	96906	31	7
	96906	101	4
	96906	101	30
S90726-68	96906	5	6
	96906	101	9
S90726-70	96906	5	16
S90726-8	96906	120	38
S90727-165	96906	30	12
S90728-109	96906	102	1
S90728-70	96906	78	2
12874	74400	26	1
12876	74400	26	1
13542	74400	79	1
13542-1	74400	79	7
1509	74400	80	1
1672	74400	81	12
2361-9-15	92863	10	34
7	06229	82	
R251	73195	116	6
0A25	82647	79	12
0A6	73803	79	19
0LA45	73803	82	7
10-0808	18265	39	2
10-1238	18265	39	3
10-3198	18265	39	8
10-3671	18265	39	1
10-5168	18265	38	4
11-2031	18265	39	5
11-2077	18265	39	7
7804	18265	39	6
8464	18265	39	4
231	17284	38	25

REFERENCE NO.	MFG CODE	FIGURE NO.	ITEM NO.
RA26561-2	73195	116	5
RBX00-2226	18265	38	1
R107	78643	78	6
R109	78643	15	29
	78643	101	14
R111	78643	11	1
SERUR34-1	79780	97	14
SPGR5-2	79780	97	9
SR346TU5	73195	116	7
TC110	75272	82	
TC12	75272	12	16
TC16	75272	120	40
TC171	75272	82	
TS33-440	91265	10	17
W110-16M	91561	10	14
WAR34-4	75780	97	15
WAR44-3	78500	97	13
WWV351TYPE1	81348	83	42
X230208	88142	45	10
X230209	88142	45	8
001484	16764	81	9
011349-2	92392	10	23
037332-4	92392	1	15
037851-3	92392	1	16
050915-2	92392	29	26
051707-2	92392	140	
074452	92392	79	6
0920168	92392	81	11
101487	88142	45	17
101488	88142	45	16
101489	73370	45	15
102153	87405	42	7
102593	00000	83	6
103-3502-1331-40	72619	79	8
103496	00000	101	18
	00000	114	7
103629	88142	45	14
103896	09367	40	31
104018	73340	45	19
104071	88142	45	18
104503	88142	42	3
105417	00000	83	43
	00000	120	7
105616	00000	38	26
10786	80194	1	2
10815	80194	1	23
109024	88142	42	6
109084	00000	46	10
	00000	59	4
	00000	82	6
	00000	82	11
10920506	19207	24	2
10920548-1	19207	24	1
10920548-2	00000	24	1
10930019	00000	24	5
1111-6AA	34229	29A	13
1111-16AA	34229	29A	10
1113868	16764	60	5
1116998	16764	79	15
114380	00000	100	8
1210-6	34229	29A	14
1216-4	34229	29A	11
121709	88142	45	13
121832	00000	24	7
121841	00000	23	7
121902	00000	38	2
	00000	79	14
	00000	81	4
122236	00000	15	28
	00000	114	11
12385	84760	44	5
12500263	79780	134	
	79780	138	7
1250Z182A	78500	132	17
	78780	136	18
125438	00000	139	1
127951	00000	63	5
1290-10S	01276	40	23
13220E6588	97403	29B	3
133111	00000	38	27

SECTION IV. INDEX-NATIONAL STOCK NUMBER AND REFERENCE NUMBER CROSS-REFERENCE TO FIGURE AND ITEM NUMBER

REFERENCE NO.	MFG CODE	FIGURE NO.	ITEM NO.
134566	00000	25	11
14S	79470	76	13
140	79470	77	29
140039	24617	83	12
143407	87405	42	4
143938	73342	113	1
143985	24617	134	9
	24617	138	5
144243	24617	114	8
144513	88142	42	1
145645	24617	97	10
149060	92392	45	12
15D44434B05	94990	58	1
150035	88142	42	2
15001-2	74400	80	2
151413	88142	42	8
153684	88142	42	9
154100	88142	42	
16R2X	02231	83	27
1606-9AA	34229	29A	12
1616-27AA	34229	29A	9
17C44555A07	94990	82	13
171123	24617	15	2
	24617	15	7
	24617	30	6
	24617	34	3
172378	00000	32	3
172427	00000	35	2
180084	00000	48	15
1822	17284	38	11
18633	80194	1	3
190263-12	01276	6	19
190877	00000	23	4
1914647	16764	61	20
1915309	16764	79	
195423-9	92392	99	2
1996005	16764	81	2
1996041	16764	79	34
2A41435A03	94990	57	17
2006797-7	92392	117	12
2023-8-10S	01276	40	25
202702-8-8S	01276	92	9
204157	80194	1	18
204820	06835	84	6
20500	36251	3	9
2050363-5	92392	117	7
2062-8-8S	01276	92	4
2081-12-8S	01276	56	13
209199	00000	90	31
209992	80194	1	11
210295-12S	01276	7	7
211-02	79780	95	3
2110-2	04716	91	9
211547	80194	4	8
211548	80194	4	4
211549	80194	4	7
213741	00000	82	1
2148584	24617	96	10
2148585	24517	98	8
	24617	95	4
215310	92392	120	33
2155	79150	10	26
	79150	77	28
218512	00000	91	11
221154	06853	120	9
224296	06853	120	37
22929M1	80194	1	19
229778	77445	135	9
234024	87045	42	5
23438058	78252	10	18
23604-24X	99103	9	2
236577	08853	87	3
236705-0	92932	40	4
23904	80194	1	6
240334-3	06853	88	10
240336-8	06853	88	11
240339-2	06853	88	4
240345-9	06853	88	2
240346-7	06853	88	14

REFERENCE NO.	MFG CODE	FIGURE NO.	I N
240347-5	06853	88	1
2586-10	04716	91	7
26463	80194	4	6
265079	52788	90	20
2698	30327	46	3
274070	72582	88	13
275201-2	06853	88	9
275202-0	06853	88	3
275230-1	06853	88	12
29N1516	72962	36	16
29561	80194	1	7
29582	80194	1	20
3SS32-5	79780	96	14
3000	27964	40	5
3001171-2	92392	15	1
	92392	101	1
3001437	92392	6	15
3001559-8	92392	2	2
	92392	3	7
3001621	92392	92	12
3002196-8	92392	6	10
3005382-1	92392	99	1
3006439-8	92392	99	16
3006769-8	92392	117	1
3006799-5	92392	117	14
3006806-8	92392	117	13
3006816-7	92392	77	6
3007065-0	92392	15	35
3007115-3	92392	117	15
3010159-6	92392	10	27
	92392	77	27
3011248-6	92392	7	3
3011248-6	92392	92	8
	92392	100	
3013807-7	92392	97	7
3014236-9	92392	78	15
3015837-2	92392	8	7
3016399-2	92392	101	10
3016496-6	92392	46	2
3018142-4	92392	101	26
3018302-4	92392	78	13
3019231-4	92392	10	21
3019807-1	92392	135	5
3020874-8	92392	15	9
3020955-5	92392	9	7
3022056-0	92392	96	12
3024079-9	92392	34	18
3025958-4	92392	15	12
3026405-5	92392	101	16
3028393-1	92392	77	21
3028787-4	92392	122	15
3029291-6	92392	29	6
3029296-5	92392	79	16
3029297-3	92392	79	17
3029930-9	92392	83	35
3031668-1	92392	120	3
3032277-0	92392	10	22
3032335-6	92392	36	8
3032350-5	92392	135	4
3036228-9	92392	38	13
3037002-7	92392	83	47
3037049-8	92392	120	14
3038683-3	92392	38	16
3038768-2	89926	116	8
3040	77915	89	1
3040648-2	92392	38	20
3042641-5	92392	36	12
3042646-4	92392	30	9
3042706	92392	92	11
3042747-0	92392	96	
3042772-6	92392	3	5
3042772-8	92392	3	5
3042816-3	92392	96	6
3042830-1	92392	44	11
3042836-1	92392	122	2
3042838-7	92392	122	13
3042839-5	92392	122	1

REFERENCE NO.	MFG CODE	FIGURE NO.	ITEM NO.
3043082-1	92392	36	2
3043197-7	92392	122	3
304339-6	92392	78	9
3043474-0	92392	30	20
3043475-7	92392	30	20
3043646-3	92392	56	11
3043676-0	92392	15	13
3043841-0	92392	29	16
	92392	32	2
3044015-0	92392	82	
3044055-6	92392	92	5
3044112-5	92392	5	11
3044134-9	92392	5	8
3044154-7	92392	5	10
3044155-4	92392	5	9
3044159-6	92392	122	14
3044170-3	92392	6	3
3044236-2	92392	31	4
3044364-2	92392	99	14
3044842-7	92392	10	13
3044869-0	92392	2	1
3044879-9	92392	30	24
3044937-5	92392	77	23
3044963-1	92392	3	14
3045055-5	92392	3	10
3045059-5	92392	3	20
3045107-4	92392	3	19
3045234-6	92392	31	10
3045248-6	92392	101	22
3045324-5	92392	10	36
3045472-2	92392	2	6
3045784-0	92392	10	33
3045837-6	92392	9	8
3045843-4	92392	38	10
3045855-8	92392	10	8
3045858-2	92392	30	5
3045859-0	92392	10	4
3045873-1	92392	10	20
3045887-1	92392	10	19
3045896-2	92392	78	12
3045906-9	92392	122	8
3045907-7	92392	122	5
3045908-5	92392	122	6
3045983	92392	33	16
3045983-8	92392	33	9
3045984	92392	33	19
3045984-6	92392	33	22
3047506-5	92392	124	8
3047507-3	92392	125	
3047529-7	92392	100	5
3047952-1	92392	31	9
3048256-6	92392	114	16
3048332-6	92392	78	5
3048511-5	92392	120	20
3048541-1	92392	44	8
3048619-5	92392	79	32
3048711-0	92392	79	11
3048713	92392	79	21
3048860-5	92392	101	21
3048960-3	51588	101	
3048964-5	92392	89	4
3048968-6	92392	89	2
3050040-9	92392	3	12
3050139-9	92392	3	3
3050140-7	92392	3	2
3050141-5	92392	3	4
3050142-3	92392	3	1
3050174-6	92392	3	21
3050180-3	92392	99	3
3050228-0	92392	78	
3050286-8	92392	120	11
3050295-9	92392	120	41
3050318-9	92392	114	19
3050319-7	92392	101	13
3050321-3	92392	81	6
3050338-8	92392	38	18
3050345-2	92392	81	3

REFERENCE NO.	MFG CODE	FIGURE NO.
3050351-0	92392	114
3050352-8	92392	38
3050354-4	92392	120
3050355-1	92392	120
3050356-9	92392	120
3050357-7	92392	120
3050362-7	92392	117
3050370-0	92392	101
3050376-7	92392	122
3050377-5	92392	122
3050378-3	92392	122
3050379-1	92392	117
3050380-9	92392	117
3050390-8	92392	101
3050399-9	92392	124
3050400-5	92392	101
3050402	92392	34
3050403	92392	34
3050404-7	92392	6
3050420-3	92392	78
3050421-1	92392	6
3050433-6	92392	114
3050434-4	92392	6
3050435-1	92392	9
3050441-9	92392	6
3050769-3	92392	101
3050771	92392	101
3050805-5	92392	7
3050806-3	92392	7
3050808-9	92392	5
3050810-5	92392	7
3050811-3	92392	7
3050812-1	92392	7
3050813-9	92392	7
3050814-7	92392	122
3050815	92392	122
3050816-2	92392	91
3050817-0	92392	6
3050818-8	92392	7
3050819-6	92392	7
3050820-4	92392	7
3050821-2	92392	7
3050822-0	92392	7
3050823-8	92392	7
3050824-6	92392	7
3050825-3	92392	7
3050833-7	92392	10
3050840-2	92392	7
3050841-0	92392	5
3050842-8	92392	5
	92392	5
3050843-6	92392	7
3050844-4	92392	8
3050845-1	92392	5
3050846-9	92392	5
3050847-7	92392	5
3050848-5	92392	5
3050849-3	92392	5
3050851-9	92392	92
3050852-7	92392	99
3050853-5	92392	99
3050854-3	92392	6
3050855-0	92392	8
3050856-8	92392	92
3050857-6	92392	8
3050859-2	92392	99
3050871-7	92392	13
3050872-5	92392	13
3050877-4	92392	12
3050878-2	92392	12
3050882-4	92392	92
3050914-5	92392	29
3050916-0	92392	29
3050917-8	92392	29
3050918-6	92392	29
3050923-6	92392	29

SECTION IV. INDEX-NATIONAL STOCK NUMBER AND REFERENCE NUMBER
CROSS-REFERENCE TO FIGURE AND ITEM NUMBER

REFERENCE NO.	MFG CODE	FIGURE NO.	ITEM NO.
3050973-1	92392	120	39
3050974-9	92392	81	16
3050979-8	92392	77	11
3050983-0	92392	77	16
3050997-0	92392	29	11
3051023-4	92392	30	8
3051025-9	92392	83	25
	92392	121	1
3051030-9	92392	121	7
3051032-5	92392	44	2
3051036-6	92392	30	7
3051037-4	92392	30	7
3051039-0	92392	44	19
	92392	77	25
3051047-3	92392	15	26
3051048-1	92392	15	41
3051049-9	92392	15	23
3051051-5	92392	15	24
3051052-3	92392	15	27
3051053-1	92392	15	40
3051067-1	92392	34	1
3051070-5	92392	26	5
3051082-0	92392	15	20
3051083-8	92392	15	22
3051088-7	92392	15	30
3051094-5	92392	77	15
3051096-0	92392	15	5
3051103-4	92392	77	14
3051118-2	92392	12	24
3051182-8	92392	140	
3051183-6	92392	8	2
3051184-4	92392	6	18
3051185-1	92392	8	11
3051186-9	92392	6	20
3051702-3	92392	32	1
3051710-6	92392	140	
3051711-4	92392	140	
3051713-0	92392	140	
3051714-8	92392	140	
3051715-5	92392	140	
3051719-7	92392	120	1
3051721-3	92392	140	
3051725-4	92392	101	2
3051731-2	92392	116	2
3051732-0-305172	92392	116	1
3051743-7	92392	140	
3051750-2	92392	101	7
3051759-3	92392	101	3
3051778-3	92392	38	5
3051793-2	92392	78	3
3051826-0	92392	91	
3051862-2	92392	77	17
3051869-0	92392	77	20
3051898-9	92392	15	21
3051900-3	92392	15	16
3051938-3	92392	53	1
3051942-5	92392	15	34
3051943-3	92392	15	25
3051944-1	92392	15	15
3051945-8	92392	15	8
3051957-3	92392	140	
3051964-9	92392	15	36
3051966-4	92392	15	6
3051987-2	92392	140	
3051989-8	92392	140	
3051980-5	92392	15	33
3052004-3	92392	140	
3052005-0	92392	15	39
3052011-8	92392	140	
3052012-6	92392	140	
3052024-1	92392	30	31
3052026-4	92392	82	
3052027-4	92392	42	20
3052028-2	92392	44	18
3052029-0	92392	77	5
3052035-7	92392	42	21

REFERENCE NO.	MFG CODE	FIGURE NO.
3052036-5	92392	42
3052037-3	92392	42
3052041-5	92392	82
3052042-3	92392	82
3052046-4	92392	117
3052076-1	92392	82
3052077-9	92392	82
3052078-7	92392	82
3052079-5	92392	82
3052085-2	92392	30
3052090-2	92392	26
3052091-0	92392	46
3052093-6	92392	82
3052094-4	92392	82
3052100-9	92392	140
3052103-3	92392	82
3052108-2	92392	140
3052109-0	92392	140
3052110-8	92392	82
3052114-0	92392	140
3052115-7	92392	140
3052124-9	92392	140
3052127-2	92392	82
3052128-0	92392	140
3052129-8	92392	140
3052132-2	92392	30
3052133-0	92392	30
3052143-9	92392	140
3052144-7	92392	140
3052149-6	92392	82
3052160-3	92392	60
	92392	82
3052167-8	92392	82
3052169-4	92392	29
3052172-8	92392	2
3052173-6	92392	140
3052177-7	92392	79
3052298-1	92392	82
3052306-2	92392	82
3052309-6	92392	82
3052323-7	92392	34
3052485-4	92392	36
3052487-0	92392	36
3052530-7	92392	7
3052867-3	92392	40
3053222-0	92392	79
3053227-1	92392	83
	92392	121
3053228-7	92392	83
3053252-7	92392	100
3054135-3	92392	77
3057688-8	92392	24
31102	70960	96
3133	04716	91
32254	23382	77
32276	30327	44
32279	30327	44
33316-13	81321	100
34288	57733	79
34428	81321	100
3460S137	57733	79
346DT101	57733	79
36P	66295	9
	66295	36
	66295	56
	66295	77
360FK	57733	79
4A41436A03	94990	57
4DTXS	45681	38
40E	30327	77
4000S35	76667	40
4004	01943	10
4025050-8	92392	64
4025058-1	92392	53
4025101-9	92392	56
4025139-9	92392	54
4025165-4	92392	63

SECTION IV. INDEX-NATIONAL STOCK NUMBER AND REFERENCE NUMBER CROSS-REFERENCE TO FIGURE AND ITEM NUMBER

REFERENCE NO.	MFG CODE	FIGURE NO.	ITEM NO.
025217-3	92392	47	16
025218-1	92392	47	15
025219-9	92392	47	1
025376-7	92392	40	26
025385-8	92392	48	13
025429-4	92392	60	2
025507-7	92392	83	19
025619-0	92392	53	2
025621-6	92392	70	8
025634-9	92392	83	15
025641-4	92392	53	4
025652-1	92392	83	3
025653-9	92392	83	5
025717-2	92392	76	20
025719-8	92392	63	4
025720-6	92392	63	1
025781-8	92392	40	18
025914-5	92392	70	14
025927-7	92392	40	1
025992-1	92392	70	13
025993-9	92392	70	7
026031-7	92392	57	7
026116-6	92392	47	12
026191-9	92392	40	22
026224-8	92392	40	3
026382-4	92392	42	18
026479-8	92392	47	14
026533-2	92392	47	13
026534-0	92392	47	10
026535-7	92392	47	9
026536-5	92392	47	8
026537-3	92392	47	7
026538-1	92392	47	6
026566-2	92392	40	11
026592-8	92392	76	15
026849-2	92392	76	16
026886-4	92392	54	13
026911-0	92392	40	32
027021-7	92392	56	1
027023-3	92392	56	8
027027-4	92392	56	6
027197-5	92392	83	28
027238-9	94990	57	15
027245-2	92392	83	4
027247-8	92392	54	5
027273-4	92392	45	5
027320-3	92392	65	7
027327-8	92392	57	4
027883-0	92392	48	1
040351-1	92392	83	1
053235-0	92392	85	12
056130-0	92392	86	8
059708-0	92392	83	23
059709-8	92392	83	22
1015120205	00000	139	12
253977-5	92392	70	5
254816-4	92392	54	3
255286-9	92392	83	11
255612-6	92392	40	21
257247-8	92392	56	10
3A44663801	94990	57	13
3115	29944	298	1
317554-6	92392	56	17
338301-7	92392	40	12
354449-3	92392	76	21
354836-1	92392	30	35
378871-06	92392	99	10
389823-8	92392	87	4
43998	00000	40	14
4171	00000	120	28
4592	73342	113	22
4612	73342	113	2
4614	00000	45	11
4619	00000	68	9
	24617	40	27
4655	24617	132	1
	24617	136	1
4672	73342	113	7

REFERENCE NO.	MFG CODE	FIGURE NO.	ITEM NO.
444703	00000	54	6
	00000	56	4
444854	00000	64	3
	00000	56	7
445751	24617	56	14
4501149-1	92392	47	4
45012-3	30327	44	13
4504409-6	92392	47	5
4507359-0	92392	47	21
4507415-0	92392	47	20
453285	16764	61	30
453287	24617	61	29
453418	16764	79	
4578	52392	26	4
46134	80194	1	22
4650229-0	92392	70	6
47W14X1-8	30327	122	11
4716090-8	92392	14	
48X4A	79470	83	44
4880	90940	26	4
49C44649803	94990	57	14
49X5A5X4	79470	44	3
5NYSM28-98	79780	55	1
5N81	79780	95	9
5N9	79780	95	8
50NL528-22	79780	95	5
5000-215	79136	97	12
501680	80194	14	
501681	80194	14	
503322	00000	5	18
503520	00000	139	5
5133	74400	26	3
5141	76894	120	47
51902	80194	1	5
520904	00000	116	3
5294507	00000	25	9
5315X12	79470	99	21
537801	00000	132	14
537803	00000	136	15
5695788	52788	91	1
5703317	19207	27	1
58N3-1	79780	95	
58065	80194	1	9
58066	80194	1	4
58068	80194	1	
5822X12	79470	99	7
590219	00000	139	13
6NYSM34-4	75780	97	11
6NYS32-90	75780	96	13
6N81	70960	96	4
	70960	97	6
6N9	70960	96	3
	70960	97	5
60FL1-4	30327	83	20
6000	53477	116	
60722	80194	1	8
6081	74400	26	2
61FL1-4	30327	83	16
6110C42-775	92867	114	1
6211-031	91561	10	16
621979-4	92392	38	9
6235X	04716	91	8
6242X	04716	91	4
6242X1	04716	91	6
62560	30327	44	16
6302-18	91561	10	15
635380	00000	135	3
642869-2	90940	29	3
64549	81321	100	15
64555	81321	100	10
64754	80194	4	2
654274-1	92392	11	3
656DC-24V	08108	79	9
664373-8	92392	11	4
6664119	81321	100	12
6666492	81321	10	32
6674144	81321	100	16

CROSS-REFERENCE TO FIGURE AND ITEM NUMBER

REFERENCE NO.	MFG CODE	FIGURE NO.	ITEM NO.
6674819	81321	100	6
675X185	06853	120	44
6750265	00000	113	12
6758337	73342	113	13
6774012	73342	102	2
6777173	73342	113	8
6777318	73342	113	23
68FL1-4X1-8	30327	83	17
68X4A	79470	120	2
	79470	120	36
68X8A	79470	120	30
68X8A8X8	79470	83	32
681X3	79470	81	13
	79470	83	24
69FL	30327	83	31
69FL1-4X1-8	30327	49	1
	30327	83	18
69FL3-8X1-8	30327	40	10
69X2	79470	121	3
69X4A	79470	120	34
69X8	79470	117	8
	79470	120	10
	79470	120	12
	79470	120	24
	79470	120	26
70B44810B01	80211	82	12
700X11	34229	29A	1
70044832801	94990	59	1
701X3	79470	79	10
702X4	79470	117	3
7044	64104	10	6
7044253	00000	139	4
7049602	00000	139	8
7049603	00000	139	7
70916	70434	7	18
70925041	92392	15	10
71703	80254	40	20
73007198	92392	36	5
73050972	25424	120	35
73059575	92392	36	4
7320656	00000	23	3
	00000	24	3
7320711	00000	25	12
74025101	92392	56	9
74025106	92392	54	4
74026579	92392	64	1
74027014	92392	63	2
74027024	92392	56	15
74028795	92392	63	3
74513701	92392	40	17
7525940	00000	25	2
7525997	00000	24	6
	19207	23	8
1526018	00000	23	2
765	90218	28	2
7714881	00000	139	9
7716634	19207	82	
7716884	19207	82	
7722323	00000	82	
	19207	82	
7722333	00000	82	
7723308	00000	82	
7723309	00000	82	
7760103	00000	139	
7760104	00000	139	3
7771274-1	00000	81	1
780V65	34229	29A	16
780V72	34229	29A	17
78067	80194	7	10
788X18-3	34229	29A	7
788X18-5	34229	29A	8
8017004	19207	119	
80476	80194	1	12
8338566	00000	25	4
8338567X	00000	25	5
8351319	00000	113	11
8378662	00000	23	5
8378786	00000	23	1
8668096	00000	139	11
8701325	19207	82	
8710	80194	4	1

REFERENCE NO.	MFG CODE	FIGURE NO.
8724245	19207	82
8741442	00000	25
8741492	00000	25
87425B	19207	82
8743067	00000	120
8747986	00000	25
8747987	00000	25
900564-43	01276	92
901173-5	92392	140
901310-3	92392	140
901714-6	92392	120
901825-0	92392	120
9025017-6	92392	44
903752-4	92392	80
904204-5	92392	28
	92392	38
	92392	46
	92392	47
	92392	59
	92392	79
	92392	81
	92392	82
	92392	100
904205-2	92392	57
904206-0	89926	38
	92392	23
	92392	24
	92392	25
	92392	29
	92392	29
	92392	40
	92392	40
	92392	42
	92392	44
	92392	45
	92392	53
	92392	54
	92392	54
	92392	57
	92392	64
	92392	70
	92392	77
	92392	81
	92392	82
	92392	100
904207-8	92392	45
	92392	56
	92392	77
	92392	78
904208-6	92392	29
904267	92392	8
910100-1	92392	77
911030-5	92392	1
911041-2	92392	100
911115-4	92392	100
913177-2	92392	90
	92392	117
914-87-2	92392	120
915274-5	92392	2
915399-0	92392	83
915408-9	92392	23
916197	92392	8
916225-6	92392	100
916383-3	92392	100
916448-4	92392	1
917330-3	92392	83
917340-2	92392	29
917391-5	92392	120
917441-8	92392	79
917443-4	92392	79
917647-0	92392	114
917664-5	92392	114
917665-2	92392	114
917660-0	92392	15
917806-2	92392	47
917809-6	92392	47
917810-4	92392	40
917835-1	92392	2
	92392	3

SECTION IV. INDEX-NATIONAL STOCK NUMBER AND REFERENCE NUMBER CROSS-REFERENCE TO FIGURE AND ITEM NUMBER

REFERENCE NO.	MFG CODE	FIGURE NO.	ITEM NO.
918245-2	92392	1	17
919005-9	92392	45	4
919226-1	92392	57	11
919503-3	92392	120	31
919612-2	92392	40	24
919982-9	92392	117	6
920280-5	92392	45	9
920651-7	92392	34	11
920751-5	92392	4	5
921116-0	90940	6	7
	90940	12	13
	92392	5	2
	92392	7	27
921117-8	92392	5	22
	92392	8	5
921118-6	92392	10	3
921140-0	92392	96	11
921203-6	92392	6	13
	92392	8	12
	92392	99	19
921206-9	92392	99	20
	92392	99	22
1349-7	92392	14	16
1372-9	92392	40	9
1534-4	92392	47	11
1727-4	92392	83	8
1915-5	90940	77	22
922248-0	92392	122	7
922419-7	92392	15	18
	92392	15	37
922804-0	92392	49	2
922974-1	92392	6	2
923080-6	92392	14	17
923157-2	92392	92	2
923578-9	92392	9	1
923582-1	92392	89	3
923587-0	92392	10	9
923664-7	92392	5	23
	92392	6	14
	92392	8	1
923683-7	92392	42	24
	92392	79	23
	92392	99	15
	92392	100	4
923703-3	92392	29	17
923718-1	92392	5	3
	92392	6	8
	92392	7	1
	92392	12	12
924130-8	92392	3	15
924178-7	92392	3	16
924645-5	92392	81	10
925010-1	92392	44	9
925011-9	92392	77	30
925015-0	79470	44	1
925031-7	92392	7	8
925329-5	92392	79	26
925465-7	92392	140	
	92392	140	
925486-3	92392	36	11
925784-1	92392	140	
928-27-25857	79780	97	8
928-84-25857	80318	97	2
9421427	16764	61	28
956-04-21664	79780	95	

By Order of the Secretary of the Army:

CREIGHTON W. ABRAMS
General, United States Army
Chief of Staff

Official:

VERNE L. BOWERS
Major, General, United States Army
The Adjutant General

Distribution:

To be distributed in accordance with DA Form 12-25B, (qty rqr block no. 402) Organizational maintenance requirements for Loaders.

☆ U.S. GOVERNMENT PRINTING OFFICE : 1987 O—181-421 (60828)